SERVICE MANUAL

MODEL	DEST.
VPL-CS3	WORLD
VPL-CX2	WORLD
VPL-CX3	WORLD

MODEL	DEST.
RM-PJ2	WORLD
RM-PJM11	WORLD

REVISED-1

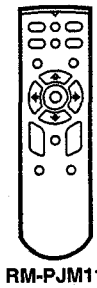

RM-PJM11

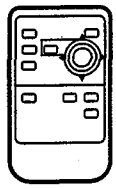

RM-PJ2

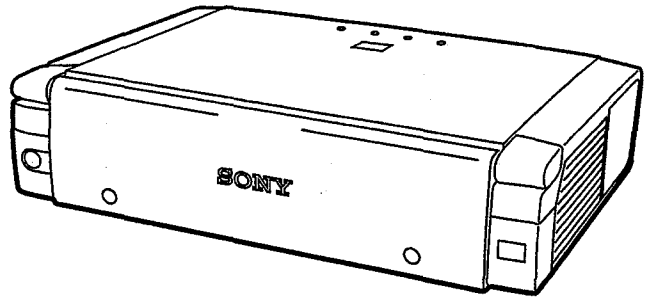

LCD DATA PROJECTOR

SONY

⚠警告

このマニュアルは，サービス専用です。
お客様が，このマニュアルに記載された設置や保守，点検，修理などを行うと感電や火災，人身事故につながることがあります。
危険をさけるため，サービストレーニングを受けた技術者のみご使用ください。

⚠WARNING

This manual is intended for qualified service personnel only.
To reduce the risk of electric shock, fire or injury, do not perform any servicing other than that contained in the operating instructions unless you are qualified to do so. Refer all servicing to qualified service personnel.

⚠WARNUNG

Die Anleitung ist nur für qualifiziertes Fachpersonal bestimmt.
Alle Wartungsarbeiten dürfen nur von qualifiziertem Fachpersonal ausgeführt werden. Um die Gefahr eines elektrischen Schlages, Feuergefahr und Verletzungen zu vermeiden, sind bei Wartungsarbeiten strikt die Angaben in der Anleitung zu befolgen. Andere als die angegeben Wartungsarbeiten dürfen nur von Personen ausgeführt werden, die eine spezielle Befähigung dazu besitzen.

⚠ AVERTISSEMENT

Ce manual est destiné uniquement aux personnes compétentes en charge de l'entretien. Afin de réduire les risques de décharge électrique, d'incendie ou de blessure n'effectuer que les réparations indiquées dans le mode d'emploi à moins d'être qualifié pour en effectuer d'autres. Pour toute réparation faire appel à une personne compétente uniquement.

WARNING!!

AN INSULATED TRANSFORMER SHOULD BE USED DURING ANY SERVICE TO AVOID POSSIBLE SHOCK HAZARD, BECAUSE OF LIVE CHASSIS.
THE CHASSIS OF THIS RECEIVER IS DIRECTLY CONNECTED TO THE AC POWER LINE.

SAFETY-RELATED COMPONENT WARNING !!

COMPONENTS IDENTIFIED BY A ⚠ MARK ON THE SCHEMATIC DIAGRAMS, EXPLODED VIEWS AND IN THE PARTS LIST ARE CRITICAL TO SAFE OPERATION. REPLACE THESE COMPONENTS WITH SONY PARTS WHOSE PART NUMBERS APPEAR AS SHOWN IN THIS MANUAL OR IN SUPPLEMENTS PUBLISHED BY SONY.

ATTENTION!!

AFIN D'ÉVITER TOUT RISQUE D'ÉLECTROCUTION PROVENANT D'UN CHÂSSIS SOUS TENSION, UN TRANSFORMATEUR D'ISOLEMENT DOIT ETRE UTILISÉ LORS DE TOUT DÉPANNAGE.
LE CHÂSSIS DE CE RÉCEPTEUR EST DIRECTEMENT RACCORDÉ Á L'ALIMENTATION SECTEUR.

ATTENTION AUX COMPOSANTS RELATIFS Á LA SÉCURITÉ!!

LES COMPOSANTS IDENTIFIÉS PAR UNE MAPQUE ⚠ SUR LES SCHÉMAS DE PRINCIPE, LES VUES EXPLOSÉES ET LES LISTES DE PIECES SONT D'UNE IMPORTANCE CRITIQUE POUR LA SÉCURITÉ DU FONCTIONNEMENT. NE LES REMPLACER QUE PAR DES COMPOSANTS SONY DONT LE NUMÉRO DE PIÈCE EST INDIQUÉ DANS LE PRÉSENT MANUEL OU DANS DES SUPPLÉMENTS PUBLIÉS PAR SONY.

CAUTION

Danger of explosion if battery is incorrectly replaced.

Replace only with the same or equivalent type recommended by the manufacturer.
Dispose of used batteries according to the manufacturer's instructions.

ADVARSEL

Lithiumbatteri - Eksplosjonsfare.
Ved utskifting benyttes kun batteri som anbefalt av apparatfabrikanten.
Brukt batteri returneres apparatleverandøren.

Vorsicht!

Explosionsgefahr bei unsachgemäßem Austausch der Batterie.

Ersatz nur durch denselben oder einen vom Hersteller empfohlenen ähnlichen Typ. Entsorgung gebrauchter Batterien nach Angaben des Herstellers.

VARNING

Explosionsfara vid felaktigt batteribyte.
Använd samma batterityp eller en likvärdig typ som rekommenderas av apparattillverkaren.
Kassera använt batteri enligt gällande föreskrifter.

ATTENTION

Il y a danger d'explosion s'il y a remplacement incorrect de la batterie.

Remplacer uniquement avec une batterie du même type ou d'un type équivalent recommandé par le constructeur.
Mettre au rebut les batteries usagées conformément aux instructions du fabricant.

VAROITUS

Paristo voi räjähtää jos se on virheellisesti asennettu.
Vaihda paristo ainoastaan laitevalmistajan suosittelemaan tyyppiin.
Hävitä käytetty paristo valmistajan ohjeiden mukaisesti.

ADVARSEL!

Lithiumbatteri-Eksplosionsfare ved fejlagtig håndtering.
Udskiftning må kun ske med batteri af samme fabrikat og type.
Levér det brugte batteri tilbage til leverandøren.

For the customers in the Netherlands
Voor de klanten in Nederland

Dit apparaat bevat een MnO_2-Li batterij voor memory back-up.

Raadpleeg de instructies deze handleiding voor het verwijderen van de batterijen.

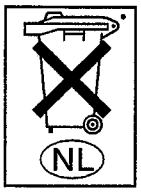

- Gooi de batterij niet weg. maar lever hem in als KCA.

Für Kunden in Deutschland

Entsorgungshinweis: Bitte werfen Sie nur entladene Batterien in die Sammelboxen beim Handel oder den Kommunen. Entladen sind Batterien in der Regel dann, wenn das Gerät abschaltet und signalisiert "Batterie leer" oder nach längerer Gebrauchsdauer der Batterien "nicht mehr einwandfrei funktioniert". Um sicherzugehen, kleben Sie die Batteriepole z.B. mit einem Klebestreifen ab oder geben Sie die Batterien einzeln in einen Plastikbeutel.

Auf welcher Weise die Batterie abzunehmen ist, siehe den entsprechenden Hinweis in dieser Anleitung

Table of Contents

1. Operating Instructions

1-1. VPL-CS3 1-1
1-2. VPL-CX2 1-22
1-3. VPL-CX3 1-43
1-4. Memory Stick 1-65

2. Service Informations

2-1. Board Layout 2-1
2-2. Disassembly and Extension Boards 2-2
2-2-1. Hood Block Assy Removal 2-2
2-2-2. H Board Removal 2-3
2-2-3. C Board Removal 2-3
2-2-4. F Board Removal 2-4
2-2-5. Optical Block Assy Removal 2-4
2-2-6. BB and GB Boards Removal [VPL-CS3/CX2] 2-5
2-2-7. QA, BB, MS and GB Boards Removal [VPL-CX3] 2-5
2-2-8. QB and BA Boards Removal [VPL-CS3/CX2] 2-6
2-2-9. QB and BA Boards Removal [VPL-CX3] 2-6
2-2-10. V Board Removal 2-7
2-2-11. GA Board Removal 2-7
2-2-12. Lamp Power and GC Board Removal 2-8
2-2-13. Projection Lens Removal 2-8
2-2-14. Prism Block Assy and In-polarizer Removal 2-9
2-2-15. Extension Boards and Extension Cables 2-10
2-2-16. Extension Boards and Extension Cables Connection 2-11
2-2-17. Warning on Power Connection 2-11

3. Electrical Adjustments

3-1. Preparations 3-1
3-1-1. Equipment Required 3-1
3-1-2. Optical Unit Adjustment 3-1
3-1-3. Factory Mode Setting 3-1
3-2. V-COM Adjustment 3-1
3-3. Adjustment Item Initialize Data 3-2
3-4. Service Knowhow 3-6
3-4-1. After Replacing the Prism Block 3-6
3-4-2. After Replacing the Board 3-6
3-5. White Balance Adjustment on Servicing 3-7
3-5-1. Signal Level Adjustment 3-7
3-5-2. White Balance Adjustment 3-7
3-6. Memory 3-8

4. Semiconductors

IC 4-1
Transistor 4-3
Diode 4-4

5. Spare Parts

5-1. Notes on Repair Parts 5-1
5-2. Exploded Views 5-2
5-2-1. Cover 5-2
5-2-2. Chassis 5-3
5-2-3. Base 5-4
5-2-4. Optics 1 5-5
5-2-5. Optics 2 5-6
5-3. Electrical Parts List 5-7
5-4. Accessories 5-32

6. Block Diagrams

Overall Block 6-1
BB Block 6-2
MS Block 6-2
C Block (For VPL-CS3) 6-4
C Block (For VPL-CX2/CX3) 6-6
BA Block 6-8
QA Block 6-8
QB Block 6-8
F Block 6-9
GA Block 6-9
GB Block 6-9
GC Block 6-9

7. Diagrams

7-1. Frame Schematic Diagram 7-2

7-2. Schematic Diagrams and Printed Wiring Boards 7-4

Schematic Diagrams

BA 7-5
BB 7-10
C 7-17
F 7-24
GA 7-25
GB 7-27
GC 7-28
H 7-29
NF 7-29
QB 7-30
V 7-30
MS 7-32
QA 7-36

Printed Wiring Boards

BA 7-4
BB 7-8
C 7-14
F 7-24
GA 7-25
GB 7-26
GC 7-28
H 7-29
NF 7-29
QB 7-30
V 7-30
MS 7-31
QA 7-35

Section 1
Operating Instructions

Reprinted from the operating instructions

1-1. VPL-CS3

4-082-023-11 (1)

SONY

LCD Data Projector

GB Operating Instructions

FR Mode d'emploi

ES Manual de instrucciones

VPL-CS3

© 2001 Sony Corporation

SONY LCD Data Projector VPL-CS3

WARNING

To prevent fire or shock hazard, do not expose the unit to rain or moisture.

To avoid electrical shock, do not open the cabinet. Refer servicing to qualified personnel only.

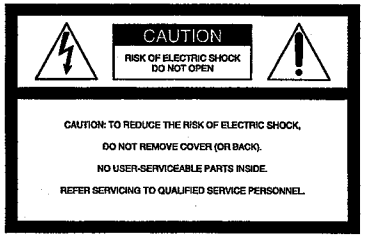

This symbol is intended to alert the user to the presence of uninsulated "dangerous voltage" within the product's enclosure that may be of sufficient magnitude to constitute a risk of electric shock to persons.

This symbol is intended to alert the user to the presence of important operating and maintenance (servicing) instructions in the literature accompanying the appliance.

For the customers in the USA

If you have any questions about this product, you may contact:
Sony Electronics Inc.
Attn: Business Information Center (BIC)
12451 Gateway Boulevard
Ft. Myers, Florida 33913
Telephone No.: 800-686-7669

The number below is for FCC related matters only.

Declaration of Conformity

Trade Name: SONY
Model No.: VPL-CS3
Responsible Party: Sony Electronics Inc.
Address: 1 Sony Drive, Park Ridge, NJ.07656 USA
Telephone No.: 201-930-6972

This device complies with Part 15 of the FCC Rules. Operation is subject to the following two conditions: (1) This device may not cause harmful interference, and (2) this device must accept any interference received, including interference that may cause undesired operation.

This equipment has been tested and found to comply with the limits for a Class B digital device, pursuant to Part 15 of the FCC Rules. These limits are designed to provide reasonable protection against harmful interference in a residential installation. This equipment generates, uses, and can radiate radio frequency energy and, if not installed and used in accordance with the instructions, may cause harmful interference to radio communications. However, there is no guarantee that interference will not occur in a particular installation. If this equipment does cause harmful interference to radio or television reception, which can be determined by turning the equipment off and on, the user is encouraged to try to correct the interference by one or more of the following measures:

- Reorient or relocate the receiving antenna.
- Increase the separation between the equipment and receiver.
- Connect the equipment into an outlet on a circuit different from that to which the receiver is connected.
- Consult the dealer or an experienced radio/TV technician for help.

You are cautioned that any changes or modifications not expressly approved in this manual could void your authority to operate this equipment.

For the customers in Canada

This Class B digital apparatus complies with Canadian ICES-003.

Voor de klanten in Nederland

Bij dit product zijn batterijen geleverd. Wanneer deze leeg zijn, moet u ze niet weggooien maar inleveren als KCA.

The socket-outlet should be installed near the equipment and be easily accessible.

Table of Contents

Overview

Precautions 6
Features 7
Location and Function of Controls ..8
Front/Side/Bottom 8
Rear/Left Side 8
Control Panel 10
Connector Panel 11
Remote Commander 11

Setting Up and Projecting

Installing the Projector 13
Connecting the Projector 14
Connecting with a Computer 14
Connecting with a VCR or 15k RGB/Component Equipment 15
Selecting the Menu Language 17
Projecting 19
Effective Tools for Your Presentation 22

Adjustments and Settings Using the Menu

Using the MENU 23
The PICTURE CTRL Menu 24
The INPUT SETTING Menu 25
The SET SETTING Menu 27
The INSTALL SETTING Menu 28

Maintenance

Maintenance 29
Replacing the Lamp 29
Cleaning the Air Filter 30
Troubleshooting 31
Warning Messages 33
Caution Messages 33

Other

Notes on Installation 34
Unsuitable Installation 34
Unsuitable Conditions 34
Specifications 35
Index 40

Precautions

On safety

- Check that the operating voltage of your unit is identical with the voltage of your local power supply.
- Should any liquid or solid object fall into the cabinet, unplug the unit and have it checked by qualified personnel before operating it further.
- Unplug the unit from the wall outlet if it is not to be used for several days.
- To disconnect the cord, pull it out by the plug. Never pull the cord itself.
- The wall outlet should be near the unit and easily accessible.
- The unit is not disconnected to the AC power source (mains) as long as it is connected to the wall outlet, even if the unit itself has been turned off.
- Do not look into the lens while the lamp is on.
- Do not place your hand or objects near the ventilation holes. The air coming out is hot.
- Be careful not to catch your fingers by the adjuster when you adjust the height of the projector. Do not push hard on the top of the projector with the adjuster out.

On illumination

- To obtain the best picture, the front of the screen should not be exposed to direct lighting or sunlight.
- Ceiling-mounted spot lighting is recommended. Use a cover over fluorescent lamps to avoid lowering the contrast ratio.
- Cover any windows that face the screen with opaque draperies.
- It is desirable to install the projector in a room where floor and walls are not of light-reflecting material. If the floor and walls are of reflecting material, it is recommended that the carpet and wall paper be changed to a dark color.

On preventing internal heat build-up

After you turn off the power with the I / ⏻ key, do not disconnect the unit from the wall outlet while the cooling fan is still running.

Caution

The projector is equipped with ventilation holes (intake) and ventilation holes (exhaust). Do not block or place anything near these holes, or internal heat build-up may occur, causing picture degradation or damage to the projector.

On cleaning

- To keep the cabinet looking new, periodically clean it with a soft cloth. Stubborn stains may be removed with a cloth lightly dampened with a mild detergent solution. Never use strong solvents, such as thinner, benzene, or abrasive cleansers, since these will damage the cabinet.
- Avoid touching the lens. To remove dust on the lens, use a soft dry cloth. Do not use a damp cloth, detergent solution, or thinner.
- Clean the filter at regular intervals.

On repacking

- Save the original shipping carton and packing material; they will come in handy if you ever have to ship your unit. For maximum protection, repack your unit as it was originally packed at the factory.

On LCD projector

- The LCD projector is manufactured using high-precision technology. You may, however, see tiny black points and/or bright points (red, blue, or green) that continuously appear on the LCD projector. This is a normal result of the manufacturing process and does not indicate a malfunction.

Features

High portability

- **Light weight/small size/simple design**
  This projector has been miniaturized to approx. 2.4 kg (5 lb 5 oz) in weight and B5-file size.
  When the front cover equipped with the control functions is closed, the design of the projector is very simple.
  You can carry it easily with your computer.

Quiet operation

Because the projector uses Sony's unique cooling mechanism, it operates quietly.

High brightness, high picture quality

- **High brightness**
  Adopting the high-efficiency optical system and the 120 W UHP lamp allows high brightness (light output 650 ANSI lumen) and excellent uniformity on the picture.
- **High resolution**
  Three 0.7-inch, about 480,000 pixel, SVGA panels provide a resolution of 800 × 600 dots for RGB input and 600 horizontal TV lines for video input.

Easy presentation

- **Simple setup with external equipment**
  This projector is preset for 25 kinds of input signals. You can project images from an external signal source just by connecting the equipment with the supplied cable and pushing the APA key.
- **Easy-to-use Remote Commander**
  The Remote Commander is equipped with various convenient keys, including the D ZOOM key for zooming in on the image, the FREEZE key for keeping the image projected even if the equipment is disconnected, and the D KEYSTONE key for correcting trapezoidal distortion of the picture.

Accepts various input signals

- **Scan converter loaded**
  This projector has a build-in scan converter that converts the input signal within 800 × 600 dots.
- **Compatible input signals**
  This projector accepts video signals of composite, S video, and component as well as VGA, SVGA, and XGA signals, which all can be displayed.
- **Compatible with six color systems**
  NTSC, PAL, SECAM, NTSC4.43[1)], PAL-M, or PAL-N color system can be selected automatically or manually.

1)NTSC4.43 is the color system used when playing back a video recorded on NTSC on a NTSC4.43 system VCR.

- Windows is a registered trademark of Microsoft Corporation in the United States and/or other countries.
- VGA, SVGA and XGA are registered trademarks of the International Business Machines Corporation, U.S.A.
- Macintosh is a registered trademark of Apple Computer, Inc.
- IBM PC/AT is a registered trademark of International Business Machines Corporation, U.S.A.
- VESA is a registered trademark of Video Electronics Standard Association.
- Display Data Channel is a trademark of Video Electronics Standard Association.
- PC-98 is a trademark of NEC Corporation.

Location and Function of Controls

Front/Side/Bottom

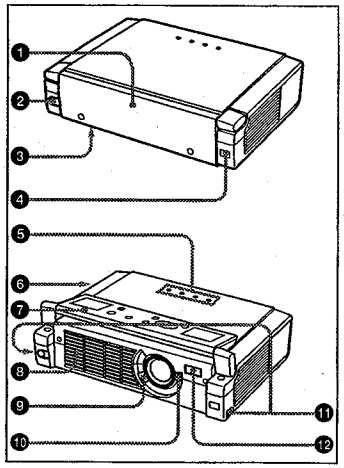

Rear/Left Side

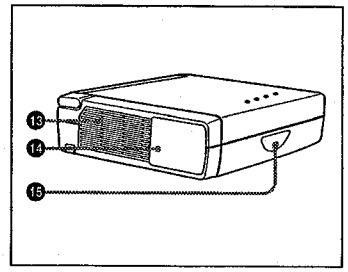

❶ Front cover
Press the OPEN button to open the front cover.

❷ OPEN button

❸ Lamp cover (bottom)

❹ Front remote control detector (SIRCS receiver)

❺ Indicators
- **LAMP/COVER:** Lights up or flashes under the following conditions:
  - Lights up when the lamp has reached the end of its life or becomes a high temperature.
  - Flashes when the lamp cover or air filter cover is not secured firmly.
- **TEMP (Temperature)/FAN:** Lights up or flashes under the following conditions:
  - Lights up when temperature inside the projector becomes unusually high.
  - Flashes when the fan is broken.
- **POWER SAVING:** Lights up when the projector is in power saving mode. When POWER SAVING in the SET SETTING menu is set to ON, the projector goes into power saving mode if no signal is input for 10 minutes. Although the lamp goes out, the cooling fan keeps running. In power saving mode, any key does not function for the first 60 seconds. The power saving mode is canceled when a signal is input or any key is pressed.
- **ON/STANDBY:** Lights up or flashes under the following conditions:
  - Lights in red when a AC power cord is plugged into a wall outlet. Once in standby mode, you can turn on the projector with the I / ⏻ key.
  - Lights in green when the power is turned on.
  - Flashes in green while the cooling fan runs after the power is turned off with the I / ⏻ key. The fan runs for about 90 seconds after the power is turned off.
    The ON/STANDBY indicator flashes quickly for the first 60 seconds. During this time, you cannot light up the ON/STANDBY indicator with the I / ⏻ key.

For details on the LAMP/COVER and the TEMP/FAN indicators, see on pages 32, 33.

❻ Security lock (right side)
Connects to an optional security cable (Kensington's).

> The security lock corresponds to Kensington's MicroSaver Security System.
> If you have any comment, contact:
> Kensington
> 2853 Campus Drive
> San Mates, CA 94403
> U.S.A.
> Tel: 800-535-4242: extension 3348
>
> Home page address:
> http://www.kensington.com/

❼ Control panel
For details, see "Control Panel" on page 10.

❽ Ventilation holes (exhaust)

❾ Focus lever
Adjusts the picture focus.

❿ Zoom lever
Adjusts the picture size.

⓫ Adjuster adjustment buttons
For details,see "How to use the adjuster" on page 10.

⓬ AC IN socket
Connects the supplied AC power cord.

⓭ Ventilation holes (intake)/air filter cover

Notes
- Do not place anything near the ventilation holes as it may cause internal heat build-up.
- Do not place your hand or objects near the ventilation holes as it may cause the air coming out heat build-up.
- To maintain optimal performance, **clean the air filter every 300 hours.**

⓮ Connector panel
For details, see "Connector Panel" on page 11.

⓯ Rear remote control detector (SIRCS receiver)

How to open/close the front cover

To open the front cover
Press the OPEN button.
The front cover is opened and set on the top panel of the projector.

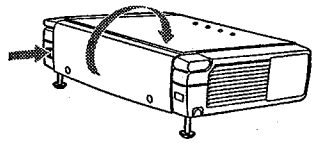

To close the front cover
Restore the front cover by hand.

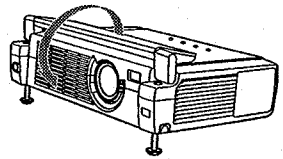

Note
Do not tilt the projector out of the range of the adjuster setting when you open the front cover. If the projector is tilted too much, the front cover opens speedily or slowly.

How to use the adjuster

To adjust the height

Adjust the height of the projector as follows:

1 Lift the projector and press the adjuster adjustment buttons.
The adjusters will extend from the projector.

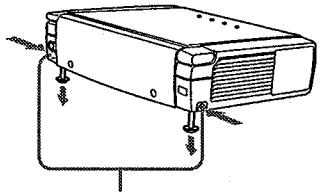

Adjuster adjustment buttons

2 While pressing the buttons, lower the projector. Then, release the buttons.
For fine adjustment, turn the adjusters to the right and the left

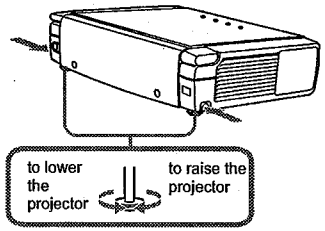

Notes

- Be careful not to let the projector down on your fingers.
- Do not push hard on the top of the projector with the adjusters out. It may be occurred malfunction.

Control Panel

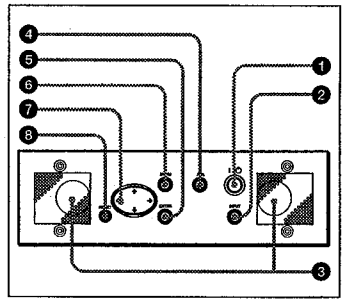

❶ I / ⏻ (on/standby) key

Turns on and off the projector when the projector is in standby mode. The ON/STANDBY indicator lights in green when the power is turned on.
When turning off the power, press the I / ⏻ key twice following the message on the screen, or press and hold the key for about one second.

For details on steps for turning off the power, see "To turn off the power" on page 21.

❷ INPUT key

Selects the input signal. Each time you press the key, the input signal switches as follows:

INPUT A ⟶ VIDEO ⟶ S VIDEO

❸ Speakers

❹ APA (Auto Pixel Alignment) key

Adjusts a picture clearest automatically while a signal is input from a computer.

❺ ENTER key

Enters the settings of items in the menu system.

❻ MENU key

Displays the on-screen menu. Press again to clear the menu.

❼ Arrow key (↑/↓/←/→)

Select the menu or to make various adjustments.

❽ RESET key

Resets the value of an item back to its factory preset value. This key functions when the menu or a setting item is displayed on the screen.

Connector Panel

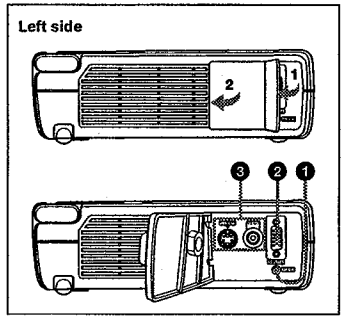

❶ AUDIO (stereo minijack) connector

When listening to sound output from the computer, connect to the audio output of the computer.
When listening to sound output from the VCR, connect to the audio output of the VCR.

❷ INPUT A connector (HD D-sub 15-pin, female)

Connect to external equipment such as a computer.
Connects to the monitor output on a computer using the supplied cable.
When inputting a component or 15k RGB signal, use an optional cable.

❸ Video input connector

Connect to external video equipment such as a VCR.

- **VIDEO (phono type):** Connects to the composite video output of video equipment.
- **S VIDEO (mini DIN 4-pin):** Connects to the S video output (Y/C video output) of video equipment.

Remote Commander

The keys that have the same names as those on the control panel function identically.

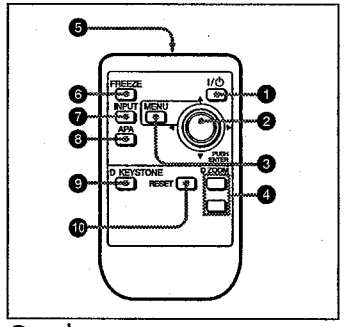

❶ I / ⏻ key

❷ ENTER/arrow key (↑/↓/←/→)

Press the center of the key to use ENTER.

❸ MENU key

❹ D ZOOM +/– key

Enlarges the image at a desired location on the screen.
+: Pressing the + key once displays the icon. This icon indicates the point you want to enlarge. Use an arrow key (↑/↓/←/→) to move the icon to the point to be enlarged. Press the + key repeatedly until the image is enlarged to your requirements.
–: Pressing the – key reduces an image that has been enlarged with the D ZOOM + key.

❺ Infrared transmitter

❻ FREEZE key

Used to freeze the picture projected. To cancel the freeze function, press the key again.

❼ INPUT key

❽ APA (Auto Pixel Alignment) key

❾ D KEYSTONE key

Corrects trapezoidal distortion of the picture. Use the arrow key (↑/↓/←/→) to adjust the angle.

❿ RESET key

Resets the value of items back to its factory preset value or returns the enlarged image back to its original size.

Before using the Remote Commander

Pull out the clear film from the lithium battery holder.

To replace battery

1 Release the lock of the lithium battery holder by picking it, and pull out the holder from the Remote Commander.

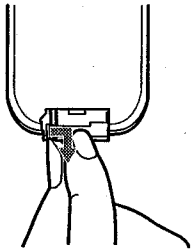

2 Install the lithium battery.

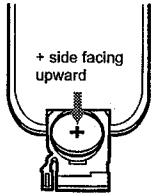

3 Put the lithium battery holder back into the Remote Commander.

Notes on the lithium battery

- Keep the lithium battery out of the reach of children.
- Should the battery be swallowed, immediately consult a doctor.

CAUTION

Danger of explosion if battery is incorrectly replaced. Replace only with the same or equivalent type recommended by the manufacturer.
Dispose of used batteries according to the manufacturer's instructions.

Notes on Remote Commander operation

- Make sure that nothing obstructs the infrared beam between the Remote Commander and the remote control detector on the projector. Direct the Remote Commander toward the front or rear remote control detector.
- The operation range is limited. The shorter the distance between the Remote Commander and the projector is, the wider the angle within which the commander can control the projector becomes.

Installing the Projector

This section describes how to install the projector.
The distance between the lens and the screen varies depending on the size of the screen. Use the following table as a guide.

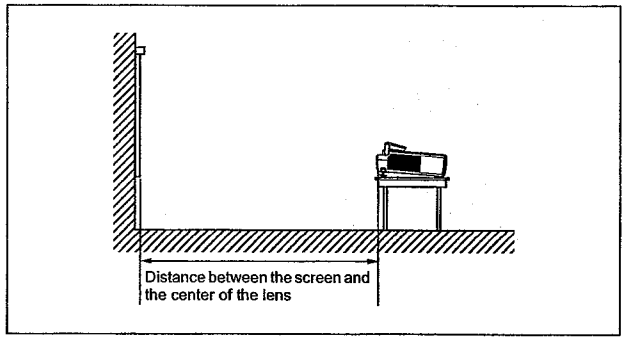

Unit: m (feet)

Screen size (inches)	40	60	80	100	120	150
Minimum Distance	1.6 (5.2)	2.4 (7.9)	3.2 (10.6)	4.0 (13.2)	4.9 (15.9)	6.1 (19.9)
Maximum Distance	1.8 (6.0)	2.8 (9.1)	3.7 (12.2)	4.7 (15.3)	5.6 (18.4)	7.0 (23.0)

Note

You can not install the projector upside down, such as on a ceiling.

Connecting the Projector

When making connections, be sure to do the following:

- Turn off all equipment before making any connections.
- Use the proper cables for each connection.
- Insert the cable plugs properly; plugs that are not fully inserted often generate noise. When pulling out a cable, be sure to pull it out from the plug, not the cable itself.

Connecting with a Computer

This section describes how to connect the projector to a computer.
For more information, refer to the computer's instruction manual.

Notes

- The projector accepts VGA, SVGA, and XGA signals. However, we recommend that you set the output mode of your computer to SVGA mode for the external monitor.
- If you set your computer, such as a notebook type, to output the signal to both your computer's display and the external monitor, the picture of the external monitor may not appear properly. Set your computer to output the signal to only the external monitor.
  For details, refer to the computer's operating instructions supplied with your computer.
- This projector is compatible with a DDC2B (Digital Data Channel 2B). If your computer is compatible with a DDC, turn the projector on according to the following procedures.

1 Connect the projector to the computer by using the supplied HD D-sub 15 pin cable.
2 Turn the projector on.
3 Start the computer.

To connect an IBM PC/AT compatible computer

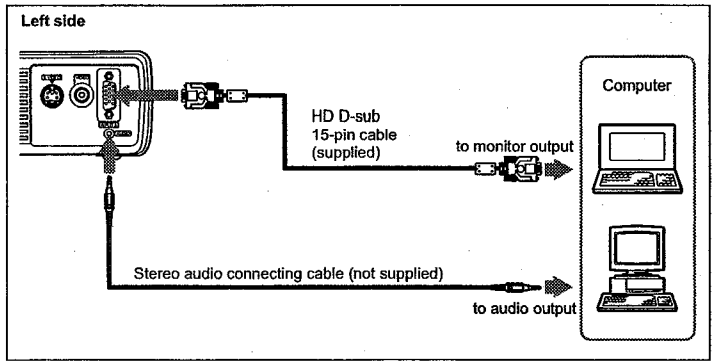

To connect a Macintosh computer

Use an ADP-20 signal adapter (not supplied).

Connecting with a VCR or 15k RGB/Component Equipment

This section describes how to connect the projector to a VCR and 15k RGB/component equipment.
For more information, refer to the instruction manuals of the equipment you are connecting.

To connect a VCR

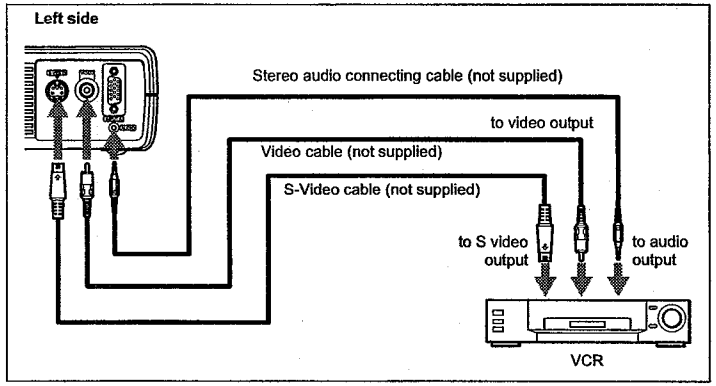

To connect a 15k RGB/Component equipment

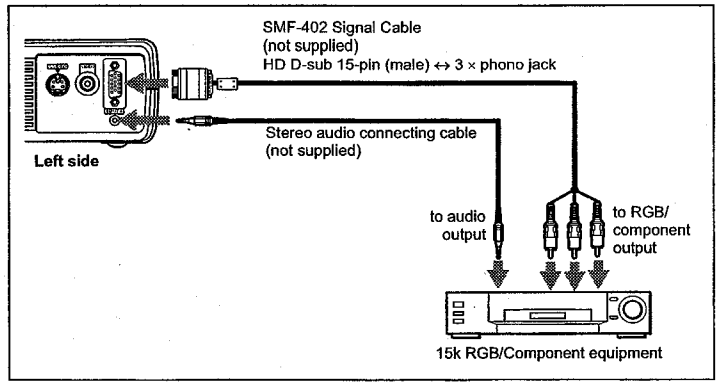

Notes

- Set the aspect ratio using ASPECT in the INPUT SETTING menu according to the input signal.
- When you connect the unit to 15k RGB or component video equipment, select video GBR or component with the INPUT-A setting in the SET SETTING menu.
- Use the composite sync signal when you input the external sync signal from 15k RGB/component equipment.

Selecting the Menu Language

You can select one of seven languages for displaying the menu and other on-screen displays. The factory setting is English.

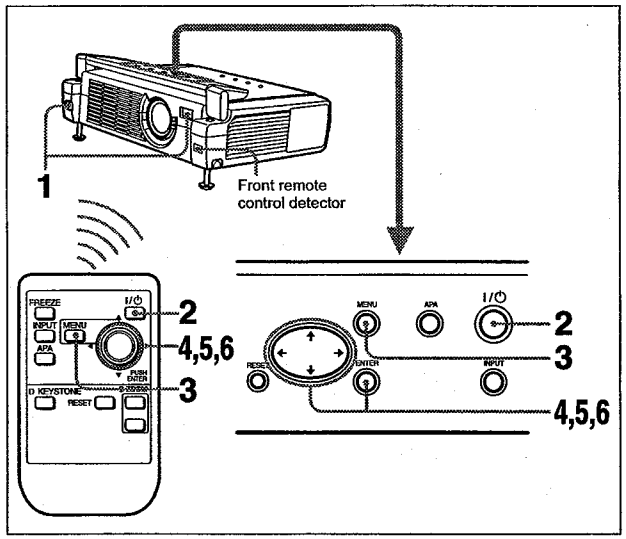

1 Open the front cover, then plug the AC power cord into a wall outlet.

2 Press the I / ⏻ key to turn on the projector.

3 Press the MENU key.
The menu appears.
The menu presently selected is shown as a yellow button.

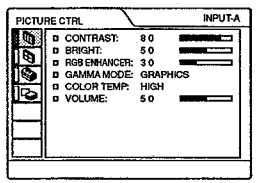

4 Press the ↑ or ↓ key to select the SET SETTING menu, then press the → or ENTER key.
The selected menu appears.

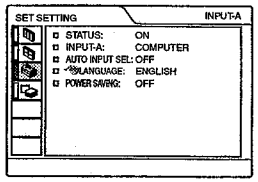

5 Press the ↑ or ↓ key to select "LANGUAGE," then press the → or ENTER key.

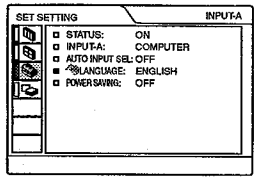

6 Press the ↑ or ↓ key to select a language, then press the ← or ENTER key.
The menu changes to the selected language.

To clear the menu

Press the MENU key.
The menu disappears automatically if a key is not pressed for one minute.

Projecting

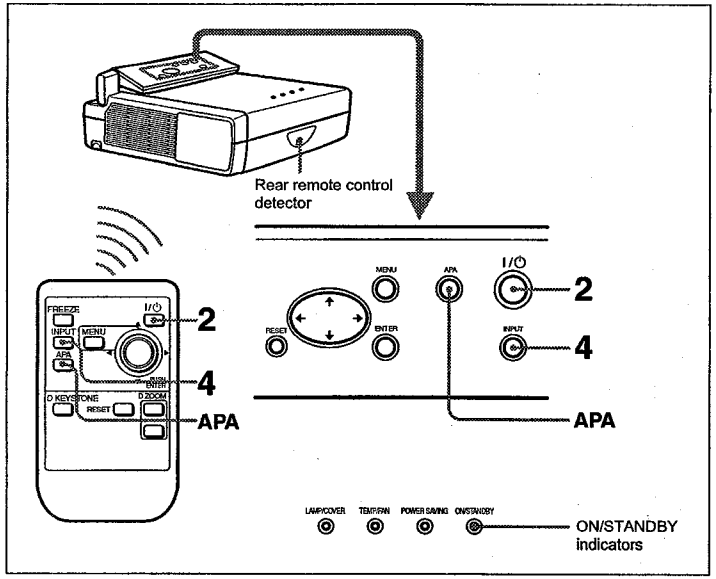

1 Open the front cover, plug the AC power cord into a wall outlet, then connect all equipment.
The ON/STANDBY indicator lights in red and the projector goes into standby mode.

2 Press the I / ⏻ key.
The ON/STANDBY indicator lights in green.

3 Turn on the equipment connected to the projector.

4 Press the INPUT key to select the input source.

To input from	Press INPUT to display
Computer connected to the INPUT A connector	INPUT A
Video equipment connected to the VIDEO input connector	VIDEO
Video equipment connected to the S VIDEO input connector	S VIDEO

5 Turn the zoom lever to adjust the size of the picture.

6 Turn the focus lever to adjust the focus.

Caution

Looking into the lens when projecting may cause injury to your eyes.

To adjust the volume

The volume can be adjusted in the on-screen menu. See "VOLUME" in the PICTURE CTRL menu on page 25.

To get the clearest picture

You can adjust picture quality when projecting a signal from the computer.

1 Project a still picture from the computer.

2 Press the APA key.
"Complete!" appears on the screen when the picture is adjusted properly.

Notes

- Press the APA key when the full image is displayed on the screen. If there are black edges around the image, the APA function will not function properly and the image may extend beyond the screen.
- When you switch the input signal or re-connect a computer, press the APA key again to adjust the picture again.
- You can cancel the adjustment by pressing the APA key again while "ADJUSTING" appears on the screen.
- The picture may not be adjusted properly depending on the kinds of input signals.
- Adjust the items in the INPUT SETTING menu when you adjust the picture manually.

To turn off the power

1 Press the I / ⏻ key.
"POWER OFF? Please press I / ⏻ key again." appears to confirm that you want to turn off the power.

Note

A message disappears if you press any key except the I / ⏻ key, or if you do not press any key for five seconds.

2 Press the I / ⏻ key again.
The ON/STANDBY indicator flashes in green and the fan continues to run for about 90 seconds to reduce the internal heat. Also, the ON/STANDBY indicator flashes quickly for the first 60 seconds. During this time, you will not be able to light up the ON/STANDBY indicator with the I / ⏻ key.

3 Unplug the AC power cord from the wall outlet after the fan stops running and the ON/STANDBY indicator lights in red.

When you cannot confirm the on-screen message

When you cannot confirm the on-screen message in a certain condition, you can turn off the power by holding the I / ⏻ key for about one second.

Note

Do not unplug the AC power cord while the fan is still running; otherwise, the fan will stop even though the internal heat is still high, which could result in a breakdown of the projector.

On air filter

To maintain optimal performance, **clean the air filter every 300 hours.**

Effective Tools for Your Presentation

To enlarge the image (Digital Zoom function)

You can select a point in the image to enlarge. This function works only when a signal from a computer is input.

1 Press the D ZOOM + key on the Remote Commander.
The digital zoom icon appears the center of the image.

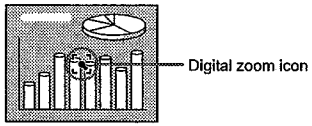

2 Move the icon to the point on the image you want to enlarge. Use the arrow key (↑/↓/←/→) to move the icon.

3 Press the D ZOOM + key again.
The image where the icon is located is enlarged. The enlargement ratio is displayed on the screen for a few seconds.
By pressing the + key repeatedly, the image size increases (ratio of enlargement: max. 4 times.)

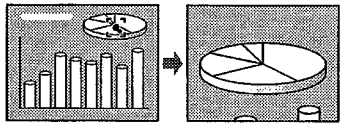

Use the arrow key (↑/↓/←/→) to scroll the enlarged image.

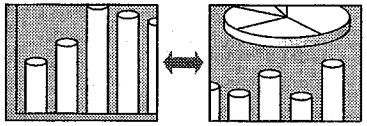

To return the image back to its original size

Press the D ZOOM – key.
Just pressing the RESET key returns the image back to its original size immediately.

To freeze the image projected (Freeze function)

Press the FREEZE key. "FREEZE" appears when the key is pressed. This function works only when a signal from a computer is input.
To restore the original screen, press the FREEZE key again.

Using the MENU

The projector is equipped with an on-screen menu for making various adjustments and settings. You can change the menu language displayed in the on-screen menu.

To change the menu language, see "Selecting the Menu Language" on page 17.

1 Press the MENU key.
The menu appears.
The menu presently selected is shown as a yellow button.

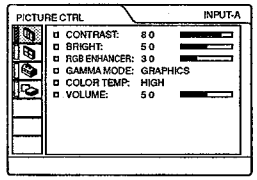

2 Use the ↑ or ↓ key to select a menu, then press the → or ENTER key.
The selected menu appears.

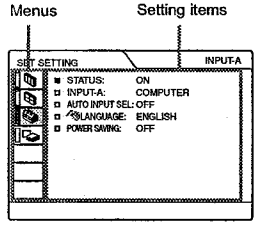

3 Select an item.
Use the ↑ or ↓ key to select the item, then press the → or ENTER key.

4 Make the setting or adjustment on an item.

- When changing the adjustment level:
  To increase the number, press the ↑ or → key.
  To decrease the number, press the ↓ or ← key.
  Press the ENTER key to restore the original screen.
- When changing the setting:
  Press the ↑ or ↓ key to change the setting.
  Press the ENTER or ← key to restore the original screen.

To clear the menu

Press the MENU key.
The menu disappears automatically if a key is not pressed for one minute.

To reset items that have been adjusted

Press the RESET key.
"Complete!" appears on the screen and the settings appearing on the screen are reset to their factory preset values.
Items that can be reset are:

- "CONTRAST," "BRIGHT," "COLOR," "HUE," "SHARP", and "RGB ENHANCER" in the PICTURE CTRL menu
- "DOT PHASE," "SIZE H," and "SHIFT" in the INPUT SETTING menu
- "DIGIT KEYSTONE" in the INSTALL SETTING menu.

About the memory of the settings

The settings are automatically stored in the projector memory.

If no signal is input

If there is no input signal, "NO INPUT– Cannot adjust this item." appears on the screen.

About the menu display

You can set the display position of the menu, intensity of the background picture and tone of the menu items as you like.

For details, see page 28.

The PICTURE CTRL Menu

The PICTURE CTRL (control) menu is used for adjusting the picture.
Items that cannot be adjusted depending on the input signal are not displayed in the menu.

For details on the unadjustable items, see page 37.

When the video signal is input

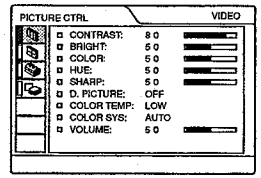

When the RGB signal is input

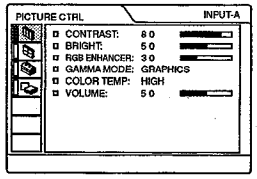

Menu Items

CONTRAST

Adjusts the picture contrast. The higher the setting, the greater the contrast. The lower the setting, the lower the contrast.

BRIGHT

Adjusts the picture brightness. The higher the setting, the brighter the picture. The lower the setting, the darker the picture.

COLOR

Adjusts color intensity. The higher the setting, the greater the intensity. The lower the setting, the lower the intensity.

HUE

Adjusts color tones. The higher the setting, the picture becomes greenish. The lower the setting, the picture becomes purplish.

SHARP

Adjusts the picture sharpness. The higher the setting, the sharper the picture. The lower the setting, the softer the picture.

RGB ENHANCER

Adjusts the picture sharpness when RGB signals are input.
The higher the setting, the sharper the picture. The lower the setting, the softer the picture.

D. (Dynamic) PICTURE

Emphasizes the black color.

ON: Emphasizes the black color to produce a bolder "dynamic" picture.

OFF: Reproduces the dark portions of the picture accurately, in accordance with the source signal.

GAMMA MODE

Selects a gamma correction curve.

GRAPHICS: Improves the reproduction of halftones. Photos can be reproduced in natural tones.

TEXT: Contrasts black and white. Suitable for images that contain lots of text.

COLOR TEMP

Adjusts the color temperature.

HIGH: Makes the white color bluish.

LOW: Makes the white color reddish.

COLOR SYS (System)

Selects the color system of the input signal.
- **AUTO:** NTSC3.58, PAL, SECAM and NTSC4.43 (switched automatically)
- **PAL-M/N:** PAL-M/PAL-N and NTSC3.58 (switched automatically)

Normally, set to AUTO. If the picture is distorted or colorless, select the color system according to the input signal.

VOLUME

Adjusts the volume. The volume can be adjusted for each of INPUT A, VIDEO and S VIDEO input.

The INPUT SETTING Menu

The INPUT SETTING menu is used to adjust the input signal.
Items that cannot be adjusted depending on the input signal are not displayed in the menu.

For details on the unadjustable items, see page 37.

When the video signal is input

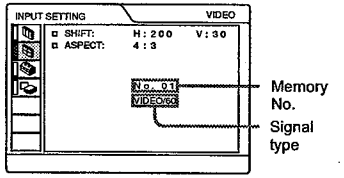

When the RGB signal is input

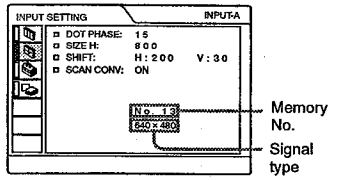

MENU Items

DOT PHASE

Adjusts the dot phase of the LCD panel and the signal input from the INPUT A connector.
Adjust the picture further for finer picture after the picture is adjusted by pressing the APA key.
Adjust the picture to where it looks clearest.

SIZE H

Adjusts the horizontal size of picture input from the INPUT A connector. The higher the setting, the larger the horizontal size of the picture. The lower the setting, the smaller the horizontal size of the picture. Adjust the setting according to the dots of the input signal.

For details on the suitable value for the preset signals, see page 38.

SHIFT

Adjusts the position of the picture input from the INPUT A connector. H adjusts the horizontal position of the picture.V adjusts the vertical position of the picture. As the setting for H increases, the picture moves to the right, and as the setting decreases, the picture moves to the left.
As the setting for V increases, the picture moves up, and as the setting decreases, the picture moves down. Use the ← or the → key to adjust the horizontal position and the ↑ and ↓ key for the vertical position.

SCAN CONV (Scan converter)

Converts the signal to display the picture according to the screen size.

ON: Displays the picture according to the screen size. The picture will lose some clarity.

OFF: Displays the picture while matching one pixel of input picture element to that of the LCD. The picture will be clear but the picture size will be smaller.

Note

When SVGA or XGA signal is input, this item will not be displayed.

ASPECT

Sets the aspect ratio of the picture. When inputting 16:9 (squeezed) signal from equipment such as a DVD player, set to 16:9.

4:3: When the picture with ratio 4:3 is input.

16:9: When the picture with ratio 16:9 (squeezed) is input.

About the Preset Memory No.

This projector has 25 types of preset data for input signals (the preset memory). When a preset signal is input, the projector automatically detects the signal type and recalls the data for the signal from the preset memory to adjust it to an optimum picture. The memory number and signal type of that signal are displayed in the INPUT SETTING menu. You can also adjust the preset data through the INPUT SETTING menu.
This projector has 20 types of user memories for INPUT-A into which you can save the setting of the adjusted data for an unpreset input signal.
When an unpreset signal is input for the first time, a memory number is displayed as 0. When you adjust the data of the signal in the INPUT SETTING menu, it will be registered to the projector. If more than 20 user memories are registered, the newest memory always overwrites the oldest one.

See the chart on page 38 to find if the signal is registered to the preset memory.

Since the data is recalled from the preset memory about the following signals, you can use these preset data by adjusting SIZE H. Make fine adjustment by adjusting SHIFT.

Signal	Memory No.	SIZE
Super Mac-2	23	1312
SGI-1	23	1320
Macintosh 19"	25	1328

Note

When the aspect ratio of input signal is other than 4:3, a part of the screen is displayed in black.

The SET SETTING Menu

The SET SETTING menu is used for changing the settings of the projector.

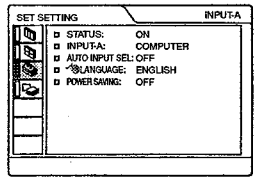

Menu Items

STATUS (on-screen display)

Sets up the on-screen display.

ON: Shows all of the on-screen displays.

OFF: Turns off the on-screen displays except for the menus, a message when turning off the power, and warning messages.

INPUT-A

Selects the computer, component or video GBR signal input from the INPUT A connector.

Note

If the setting is not correct, "Please check INPUT-A setting." appears on the screen and the color of the picture becomes strange or the picture is not displayed.

AUTO INPUT SEL

When set to ON, the projector detects input signals in the following order: INPUT-A/ VIDEO/S-VIDEO. It indicates the input channel when the power is turned on or the INPUT key is pressed.

LANGUAGE

Selects the language used in the menu and on-screen displays. Available languages are: English, French, German, Italian, Spanish, Japanese and Chinese.

POWER SAVING

When set to ON, the projector goes into power saving mode if no signal is input for 10 minutes.

The INSTALL SETTING Menu

The INSTALL SETTING menu is used for changing the settings of the projector.

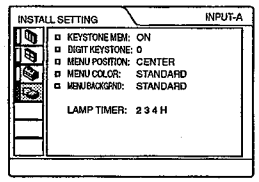

Menu Items

KEYSTONE MEM

ON: DIGIT KEYSTONE setting is stored. The data is retrieved when the projector power is turned on. The setting will remain the same every time.

OFF: DIGIT KEYSTONE is reset to 0 when the power is turned on next time.

DIGIT KEYSTONE

Corrects the trapezoidal distortion caused by the projection angle.

When the upside of the trapezoid is longer than the downside ▽ **:** Sets to a plus value.

MENU POSITION

Selects the display position of the menu from TOP LEFT, BOTTOM LEFT, CENTER, TOP RIGHT and BOTTOM RIGHT.

MENU COLOR

Selects the tone of the menu display from STANDARD, WARM, COOL, GREEN or GRAY.

MENU BACKGRND

Selects the intensity of the background picture of the menu display from DARK, STANDARD or LIGHT.

LAMP TIMER

Indicates how long the lamp has been turned on.

Note

This only displays the time. You cannot alter the display.

Maintenance

Replacing the Lamp

When the lamp has burnt out or dims, or "Please replace the LAMP." appears on the screen, replace the lamp with a new one. Use LMP-C121 Projector Lamp as the replacement lamp. The lamp life varies depending on conditions of use.

When replacing the lamp after using the projector

Turn off the projector, then unplug the power cord.
Wait for at least an hour for the lamp to cool.

Caution

The lamp becomes a high temperature after turning off the projector with the I / ⏻ key. If you touch the lamp, you may scald your finger. When you replace the lamp, wait for at least an hour for the lamp to cool.

1 Place a protective sheet (cloth) beneath the projector. Turn the projector over so you can see its underside.

Note

Be sure that the projector is stable after turning it over.

2 Open the lamp cover by loosening a screw with the Phillips screwdriver (supplied with the Projector Lamp).

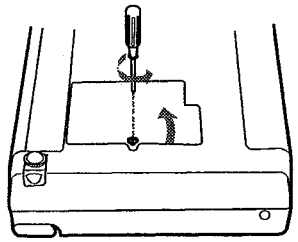

Note

For safety sake, do not loosen any other screws.

3 Loosen the screws on the lamp unit with the Phillips screwdriver. Pull out the lamp unit by the handle.

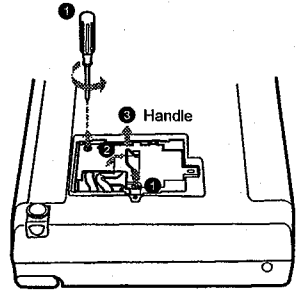

4 Insert the new lamp all the way in until it is securely in place. Tighten the screws. Fold up the handle.

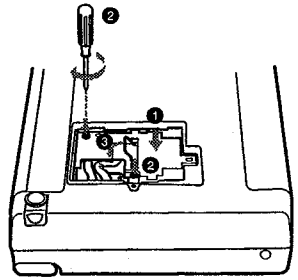

Notes

- Be careful not to touch the glass surface of the lamp.
- The power will not turn on if the lamp is not secured properly.

5 Close the lamp cover and tighten the screws.

6 Turn the projector back over.

7 Connect the power cord and turn the projector to standby mode.

8 Press the following keys on the control panel in the following order for less than five seconds each: RESET, ←, →, ENTER.

Notes

- Be sure to use the LMP-C121 Projector Lamp for replacement. If you use lamps other than LMP-C121, the projector may cause a malfunction.
- Be sure to turn off the projector and unplug the power cord before replacing the lamp.
- Do not put your hands into the lamp replacement spot, or not fall any liquid or object into it to avoid electrical shock or fire.

Cleaning the Air Filter

The air filter should be cleaned every 300 hours.
Remove dust from the outside of the ventilation holes with a vacuum cleaner.

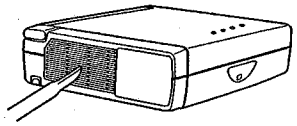

When it becomes difficult to remove the dust from the filter with a vacuum cleaner, remove the air filter and wash it.

1 Turn off the power and unplug the power cord.

2 Remove the air filter cover.

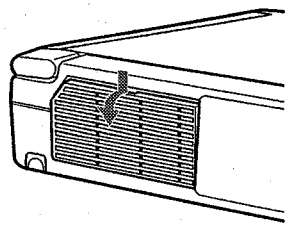

3 Remove the air filter.

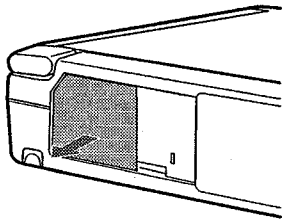

4 Wash the air filter with a mild detergent solution and dry it in a shaded place.

5 Attach the air filter and replace the cover.

Notes

- If the dust cannot be removed from the air filter, replace the air filter with the supplied new one.
- Be sure to attach the air filter cover firmly; the power will not be turned on if it is not closed securely.
- The air filter has a face and a reverse side. Place the air filter so that it fits in a notch on the air filter cover.

Troubleshooting

If the projector appears to be operating erratically, try to diagnose and correct the problem using the following instructions. If the problem persists, consult with qualified Sony personnel.

Power

Symptom	Cause and Remedy
The power is not turned on.	• The power has been turned off and on with the I / ⏻ key at a short interval. → Wait for about 90 seconds before turning on the power (see page 21). • The lamp cover is detached. → Close the lamp cover securely (see page 29). • The air filter cover is detached. → Close the air filter cover securely (see page 30).
Both the LAMP/COVER and TEMP/FAN indicators light up.	• The electrical system breaks down. → Consult with qualified Sony personnel.

Picture

Symptom	Cause and Remedy
No picture.	• Cable is disconnected or the connections are wrong. → Check that the proper connections have been made (see page 14). • Input selection is incorrect. → Select the input source correctly using the INPUT key (see page 19). • The computer signal is not set to output to an external monitor. → Set the computer signal to output to an external monitor (see page 14). • The computer signal is set to output to both the LCD of the computer and external monitor. → Set the computer signal to output only to the external monitor (see page 14).
The picture is noisy.	• Noise may appear on the background depending on the combination of the numbers of dot input from the connector and numbers of pixel on the LCD panel. → Change the desktop pattern on the connected computer.
The picture from INPUT A connector is colored strange.	• Setting for INPUT-A in the SET SETTING menu is incorrect. → Select COMPUTER, VIDEO GBR or COMPONENT for INPUT-A in the SET SETTING menu according to the input signal (see page 27).
"Please check INPUT-A setting." appears in spite of inputting the correct signal from INPUT A.	• Setting for INPUT-A in the SET SETTING menu is incorrect. → Select COMPUTER, VIDEO GBR or COMPONENT for INPUT-A in the SET SETTING menu according to the input signal (see page 27).
On-screen display does not appear.	• STATUS in the SET SETTING menu has been set to OFF. → Set STATUS in the SET SETTING menu to ON (see page 27).

Symptom	Cause and Remedy
Color balance is incorrect.	• Picture has not been adjusted properly. → Adjust the picture (see page 24). • Projector is set to wrong color system. → Set COLOR SYS in the PICTURE CTRL menu to match the color system being input (see page 25).
The picture is too dark.	• Contrast or brightness has not been adjusted properly. → Adjust the contrast or brightness in the PICTURE CTRL menu properly (see page 24).
The picture is not clear.	• Picture is out of focus. → Adjust the focus (see page 20). • Condensation has occurred on the lens. → Leave the projector for about two hours with the power on.
The picture appears too small on the screen.	• SHIFT in the INPUT SETTING menu has not been adjusted properly. → Adjust SHIFT in the INPUT SETTING menu properly (see page 26).
The picture flickers.	• DOT PHASE in the INPUT SETTING menu has not been adjusted properly. → Adjust DOT PHASE in the INPUT SETTING menu properly (see page 25).

Sound

Symptom	Cause and Remedy
No sound.	• Cable is disconnected or the connections are wrong. → Check that the proper connections have been made (see page 14).
When sound is input through AUDIO connector, sound comes through one channel only.	• Monaural sound is being input through the AUDIO connector. → Input stereo sound.

Remote Commander

Symptom	Cause and Remedy
The Remote Commander does not work.	• The Remote Commander batteries are dead. → Replace with a new battery (see page 12).

Others

Symptom	Cause and Remedy
The LAMP/COVER indicator flashes.	• The lamp cover or the air filter cover is detached. → Attach the cover securely (see page 29).
The LAMP/COVER indicator lights up.	• The lamp has reached the end of its life. → Replace the lamp (see page 29). • The lamp becomes a high temperature. → Wait for 90 seconds to cool down the lamp and turn on the power again (see page 21).

Symptom	Cause and Remedy
The TEMP/FAN indicator flashes.	• The fan is broken. → Consult with qualified Sony personnel.
The TEMP/FAN indicator lights up.	• The internal temperature is unusually high. → Check to see if nothing is blocking the ventilation holes.
Both the LAMP/COVER and TEMP/FAN indicators light up.	• The electrical system breaks down. → Consult with qualified Sony personnel.

Warning Messages

Use the list below to check the meaning of the messages displayed on the screen.

Message	Meaning and Remedy
High temp.! Lamp off in 1 min.	• Internal temperature is too high. → Turn off the power. → Check to see if nothing is blocking the ventilation holes.
Frequency is out of range!	• This input signal cannot be projected as the frequency is out of the acceptable range of the projector. → Input a signal that is within the range of the frequency. • The resolution setting of the output signal of a computer is too high. → Set the setting of output to SVGA (see page 14).
Please check INPUT-A setting.	• You have input RGB signal from the computer when INPUT-A in the SET SETTING menu is set to COMPONENT. → Set INPUT-A correctly (see page 27).
Please replace the LAMP.	• It is time to replace the lamp. → Replace the lamp.

Caution Messages

Use the list below to check the meaning of the messages displayed on the screen.

Message	Meaning and Remedy
NO INPUT	• No input signal → Check connections (see page 14).
Not applicable!	• You have pressed the wrong key. → Press the appropriate key.

Notes on Installation

Unsuitable Installation

Do not install the projector in the following situations. These installations may cause malfunction or damage to the projector.

Poorly ventilated

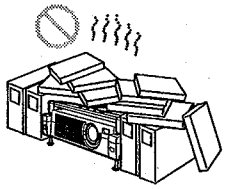

- Allow adequate air circulation to prevent internal heat build-up. Do not place the unit on surfaces (rugs, blankets, etc.) or near materials (curtains, draperies) that may block the ventilation holes. When the internal heat builds up due to the block-up, the temperature sensor will function with the message "High temp.! Lamp off in 1 min." The power will be turned off automatically after one minute.
- Leave space of more than 30 cm (11 7/8 inches) around the unit.
- Be careful that the ventilation holes may inhale tininess such as a piece of paper.

Highly heated and humid

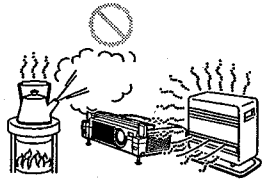

- Avoid installing the unit in a location where the temperature or humidity is very high, or temperature is very low.
- To avoid moisture condensation, do not install the unit in a location where the temperature may rise rapidly.

Very dusty

Avoid installing the unit in a location where there is a lot of dust; otherwise, the air filter will be obstructed. The dust blocking the air through the filter may cause raising the internal heat of the projector. Clean it up periodically.

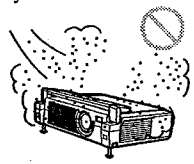

Unsuitable Conditions

Do not use the projector under the following conditions.

Toppling the unit

Avoid using as the unit topples over on its side. It may cause malfunction.

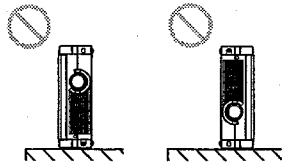

Tilting the unit out of the range of the adjuster setting

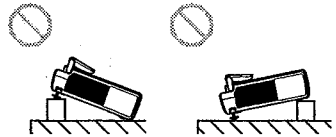

Do not install the unit other than on the floor. Avoid using when the unit is tilted out of the range of the adjuster setting. Such installation may cause malfunction.

Blocking the ventilation holes

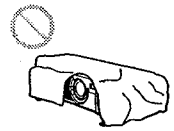

Avoid using something to cover over the ventilation holes (exhaust/intake); otherwise, the internal heat may build up.

Specifications

Optical characteristics

Projection system	3 LCD panels, 1 lens, projection system
LCD panel	0.7-inch TFT LCD panel, 1,440,000 pixels (480,000 pixels × 3)
Lens	1.3 times zoom lens f 28.4 to 34.0 mm/F 1.8 to 2.2
Lamp	120 W UHP
Projection picture size	Range: 40 to 150 inches (diagonal measure)
Light output	ANSI lumen[1] 650 lm
Throwing distance	When the SVGA signal is input 40-inch: 1586 to 1837 mm (62 5/8 to 72 1/2 inches) 60-inch: 2402 to 2777 mm (94 1/2 to 109 1/2 inches) 80-inch: 3217 to 3716 mm (126 7/8 to 146 1/2 inches) 100-inch: 4033 to 4656 mm (158 11/16 to 183 1/2 inches) 120-inch: 4849 to 5596 mm (191 to 220 1/2 inches) 150-inch: 6072 to 7005 mm (239 1/8 to 276 1/32 inches)

1) ANSI lumen is a measuring method of American National Standard IT 7.228.

Electrical characteristics

Color system	NTSC3.58/PAL/SECAM/ NTSC4.43/PAL-M/PAL-N system, switched automatically/ manually
Resolution	600 horizontal TV lines (Video input) 800 × 600 dots (RGB input)
Acceptable computer signals	fH: 15 to 70 kHz fV: 48 to 85 Hz
Speaker	Stereo speakers system, 28 mm (1 1/8 inches) diameter, max. 0.5 W × 2

Input/Output

Video input
- VIDEO: phono type
  Composite video: 1 Vp-p ±2 dB sync negative (75 ohms terminated)
- S VIDEO: Y/C mini DIN 4-pin type (male)
  Y (luminance): 1 Vp-p ±2 dB sync negative (75 ohms terminated)
  C (chrominance): burst 0.286 Vp-p ±2 dB (NTSC) (75 ohms terminated), burst 0.3 Vp-p ±2 dB (PAL) (75 ohms terminated)

INPUT A — HD D-sub15-pin (female)
Analog RGB/component:
- R/R-Y: 0.7 Vp-p ±2 dB (75 ohms terminated)
- G: 0.7 Vp-p ±2 dB (75 ohms terminated)
- G with sync/Y: 1 Vp-p ±2 dB sync negative (75 ohms terminated)
- B/B-Y: 0.7 Vp-p ±2 dB (75 ohms terminated)
- SYNC/HD:
  Composite sync input: 1-5 Vp-p high impedance, positive/negative
  Horizontal sync input: 1-5 Vp-p high impedance, positive/negative
- VD:
  Vertical sync input: 1-5 Vp-p high impedance, positive/negative

AUDIO — Stereo minijack
500 mVrms, impedance more than 47 kilohms

Safety regulations
UL1950, CSA No. 950, FCC Class B, IC Class B
NEMKO EN60950, CE, C-Tick

General

Dimensions — 275 × 65 × 214 mm (10 7/8 × 2 5/8 × 8 1/2 inches) (w/h/d) (with the front cover closed, without the projection parts)

Mass — Approx. 2.4 kg (5 lb 5 oz)

Power requirements
AC 100 to 240 V, 1.9–0.8A, 50/60 Hz

Power consumption
Max. 190 W
(Standby mode: 5 W)

Heat dissipation
648.4 BTU

Operating temperature
0°C to 35°C (32°F to 95°F)

Operating humidity
35% to 85% (no condensation)

Storage temperature
–20°C to 60°C (–4°F to 140°F)

Storage humidity
10% to 90%

Supplied accessories
Remote Commander RM-PJ2 (1)
Lithium battery CR2025 (1)
HD D-sub 15 pin cable (2 m) (1) (1-791-992-21)
Carrying case (1)
AC power cord (1)
Air filter (for replacement) (1)
Operating Instructions (1)
Quick Reference Card (1)
Ferrite core (1)

Design and specifications are subject to change without notice.

Optional accessories

Projector Lamp
LMP-C121 (for replacement)

Signal Cable — SMF-402 (HD D-sub 15-pin (male) ⟷ 3 × phono type (male))

Monitor Cable
SMF-410 (HD D-sub 15 pin (male) ⟷ HD D-sub 15 pin (male))

Signal Adapter
ADP-20 (Macintosh ⟷ HD D-sub 15-pin)

Screens
50-inch Portable Screen VPS-50C[1)]
100-inch Flat Screen VPS-100FH

Some of the items may not be available in some areas. For details, please consult your nearest Sony office.

1) VPS-50C may not be available in some areas. For details, please consult your nearest Sony office.

Pin assignment

INPUT A connector (HD D-sub 15-pin, female)

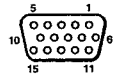

1	R/R-Y	9	N.C.
2	G/Y	10	GND
3	B/B-Y	11	GND
4	GND	12	DDC/SDA
5	GND	13	HD/C.Sync
6	GND (R)	14	VD
7	GND (G)	15	DDC/SCL
8	GND (B)		

Input signals and adjustable/setting items

PICTURE CTRL menu

Item	Input signal				
	Video or S video (Y/C)	Component	Video GBR	Computer	B&W
CONTRAST	●	●	●	●	●
BRIGHT	●	●	●	●	●
COLOR	●	●	●	–	–
HUE	● (NTSC 3.58/4.43 only)	–	–	–	–
SHARP	●	●	●	–	●
RGB ENHANCER	–	–	–	●	–
D. PICTURE	●	●	–	–	●
GAMMA MODE	–	–	–	●	–
COLOR TEMP	●	●	●	●	●
COLOR SYS	●	–	–	–	●
VOLUME	●	●	●	●	●

● : Adjustable/can be set
– : Not adjustable/cannot be set

INPUT SETTING menu

Item	Input signal				
	Video or S video (Y/C)	Component	Video GBR	Computer	B&W
DOT PHASE	–	–	–	●	–
SIZE H	–	–	–	●	–
SHIFT	●	●	●	●	●
SCAN CONV	–	–	–	● (lower than VGA)	–
ASPECT	●	●	●	–	●

● : Adjustable/can be set
– : Not adjustable/cannot be set

Preset signals

Memory No.	Preset signal		fH (kHz)	fV (Hz)	Sync	SIZE
1	Video 60 Hz		15.734	59.940		
2	Video 50 Hz		15.625	50.000		
3	15k RGB/Component 60 Hz		15.734	59.940	S on G/Y or Composite Sync	
4	15k RGB/Component 50 Hz		15.625	50.000	S on G/Y or Composite Sync	
6	640 × 350	VGA mode 1	31.469	70.086	H-pos, V-neg	800
7		VGA VESA 85 Hz	37.861	85.080	H-pos, V-neg	832
8	640 × 400	PC-9801 Normal	24.823	56.416	H-neg, V-neg	848
9		VGA mode 2	31.469	70.086	H-neg, V-pos	800
10		VGA VESA 85 Hz	37.861	85.080	H-neg, V-pos	832
11	640 × 480	VGA mode 3	31.469	59.940	H-neg, V-neg	800
12		Macintosh 13"	35.000	66.667	H-neg, V-neg	864
13		VGA VESA 72 Hz	37.861	72.809	H-neg, V-neg	832
14		VGA VESA 75 Hz	37.500	75.000	H-neg V-neg	840
15		VGA VESA 85 Hz	43.269	85.008	H-neg V-neg	832
16	800 × 600	SVGA VESA 56 Hz	35.156	56.250	H-pos, V-pos	1024
17		SVGA VESA 60 Hz	37.879	60.317	H-pos, V-pos	1056
18		SVGA VESA 72 Hz	48.077	72.188	H-pos, V-pos	1040
19		SVGA VESA 75 Hz	46.875	75.000	H-pos, V-pos	1056
20		SVGA VESA 85 Hz	53.674	85.061	H-pos, V-pos	1048
21	832 × 624	Macintosh 16"	49.724	74.550	H-neg, V-neg	1152
22	1024 × 768	XGA VESA 43 Hz	35.522	43.479	H-pos, V-pos	1264
23		XGA VESA 60 Hz	48.363	60.004	H-neg V-neg	1344
24		XGA VESA 70 Hz	56.476	70.069	H-neg V-neg	1328
25		XGA VESA 75 Hz	60.023	75.029	H-pos, V-pos	1312
26		XGA VESA 85 Hz	68.677	84.997	H-pos, V-pos	1376

Note

Whan a signal other than the preset signals shown above is input, the picture may not appear properly.

Warning on power connection

Use a proper power cord for your local power supply.

	The United States, Canada	Continental Europe	UK	Australia	Japan
Plug type	YP-11	YP-21	SP-61	B8	YP-13
Female end	YC-13L	YC-13L	YC-13L	C7-2	YC-13L
Cord type	SPT-2	H03VVH2-F	H03VVH2-F	H03VVH2-F	VFF
Rated Voltage & Current	10A/125V	2.5/250V	2.5A/250V	2.5A/250V	7A/125V
Safety approval	UL/CSA	VDE	ASTA	SAA	DENTORI

Index

A

Adjuster 10
Adjusting
  memory of the settings 23
  the picture 20, 24
  the picture size/shift ... 26
Air filter 30
ASPECT 26
AUTO INPUT SEL 27

B

Battery
  installation 12
  notes 12
BRIGHT 24

C

COLOR 24
COLOR SYS (System) .. 25
COLOR TEMP 24
Connections
  component equipment 15
  computer 14
  VCR 15
CONTRAST 24

D

D. (Dynamic) PICTURE 24
Digital Zoom function 22
DOT PHASE 25

G

GAMMA MODE 24

H

HUE 24

I

INPUT A connector 11
  pin assignment 37
INPUT SETTING menu 25
INPUT-A 27
INSTALL SETTING Menu 28
Installation examples 13
  notes 34
  unsuitable conditions .. 34
  unsuitable installation 34

L

Lamp replacement 29
LANGUAGE 27
  selecting the menu language 17
Location and function of controls
  connector panel 11
  control panel 10
  front/side/bottom 8
  rear/left side 8
  Remote Commander .. 11

M

Menu
  clearing the menu display 23
  INPUT SETTING menu 25
  PICTURE CTRL menu 24
  SET SETTING menu . 27
  using the menu 23
MENU BACKGRND 28
MENU COLOR 28
MENU POSITION 28
Message
  caution 33
  warning 33

O

Optional accessories 36

P

PICTURE CTRL menu .. 24
Pin assignment 37
Power
  turn on 19
POWER SAVING 8, 27
Precautions 6

R

Remote Commander 11
  battery installation 12
  location and function of controls 11
Remote control detector
  front 8
  rear 9
Reset
  resettable items 23
  resetting the item 23
RGB ENHANCER 24

S

SCAN CONV (Scan converter) 26
Screen size 13, 35
SET SETTING menu 27
SHARP 24
SHIFT 26
SIZE H 26
Specifications 35
STATUS (on-screen display) 27
Supplied accessories 36

T

Troubleshooting 31

V

Ventilation holes
  exhaust 9
  intake 9
VOLUME 25

Sony Corporation Printed in Japan

Sony online http://www.world.sony.com/

Printed on recycled paper

SONY

4-083-281-11 (1)

LCD Data Projector

Operating Instructions GB
Mode d'emploi FR
Manual de instrucciones ES

VPL-CX2

© 2001 Sony Corporation

WARNING

To prevent fire or shock hazard, do not expose the unit to rain or moisture.

To avoid electrical shock, do not open the cabinet. Refer servicing to qualified personnel only.

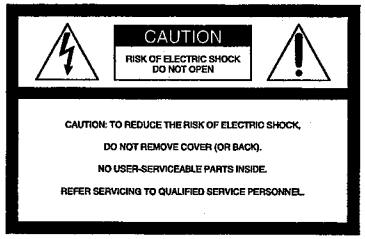

This symbol is intended to alert the user to the presence of uninsulated "dangerous voltage" within the product's enclosure that may be of sufficient magnitude to constitute a risk of electric shock to persons.

This symbol is intended to alert the user to the presence of important operating and maintenance (servicing) instructions in the literature accompanying the appliance.

For the customers in the USA

If you have any questions about this product, you may contact:
Sony Electronics Inc.
Attn: Business Information Center (BIC)
12451 Gateway Boulevard
Ft. Myers, Florida 33913
Telephone No.: 800-686-7669

The number below is for FCC related matters only.

Declaration of Conformity

Trade Name: SONY
Model No.: VPL-CX2
Responsible Party: Sony Electronics Inc.
Address: 680 Kinderkamack Road,
NJ 07649 U.S.A.
Telephone No.: 201-930-6972

This device complies with Part 15 of the FCC Rules. Operation is subject to the following two conditions: (1) This device may not cause harmful interference, and (2) this device must accept any interference received, including interference that may cause undesired operation.

This equipment has been tested and found to comply with the limits for a Class B digital device, pursuant to Part 15 of the FCC Rules. These limits are designed to provide reasonable protection against harmful interference in a residential installation. This equipment generates, uses, and can radiate radio frequency energy and, if not installed and used in accordance with the instructions, may cause harmful interference to radio communications. However, there is no guarantee that interference will not occur in a particular installation. If this equipment does cause harmful interference to radio or television reception, which can be determined by turning the equipment off and on, the user is encouraged to try to correct the interference by one or more of the following measures:
- Reorient or relocate the receiving antenna.
- Increase the separation between the equipment and receiver.
- Connect the equipment into an outlet on a circuit different from that to which the receiver is connected.
- Consult the dealer or an experienced radio/TV technician for help.

You are cautioned that any changes or modifications not expressly approved in this manual could void your authority to operate this equipment.

For the customers in Canada

This Class B digital apparatus complies with Canadian ICES-003.

Voor de klanten in Nederland

Bij dit product zijn batterijen geleverd. Wanneer deze leeg zijn, moet u ze niet weggooien maar inleveren als KCA.

The socket-outlet should be installed near the equipment and be easily accessible.

Table of Contents

Overview

Precautions 6
Features 7
Location and Function of Controls ..8
Front/Side/Bottom 8
Rear/Left Side 8
Control Panel 10
Connector Panel 11
Remote Commander 11

Setting Up and Projecting

Installing the Projector 13
Connecting the Projector 14
Connecting with a Computer 14
Connecting with a VCR or 15k RGB/Component Equipment 15
Selecting the Menu Language 17
Projecting 19
Effective Tools for Your Presentation 22

Adjustments and Settings Using the Menu

Using the MENU 23
The PICTURE CTRL Menu 24
The INPUT SETTING Menu 25
The SET SETTING Menu 27
The INSTALL SETTING Menu 28

Maintenance

Maintenance 29
Replacing the Lamp 29
Cleaning the Air Filter 30
Troubleshooting 31
Warning Messages 33
Caution Messages 33

Other

Notes on Installation 34
Unsuitable Installation 34
Unsuitable Conditions 34
Specifications 35
Index 40

GB

Precautions

On safety

- Check that the operating voltage of your unit is identical with the voltage of your local power supply.
- Should any liquid or solid object fall into the cabinet, unplug the unit and have it checked by qualified personnel before operating it further.
- Unplug the unit from the wall outlet if it is not to be used for several days.
- To disconnect the cord, pull it out by the plug. Never pull the cord itself.
- The wall outlet should be near the unit and easily accessible.
- The unit is not disconnected to the AC power source (mains) as long as it is connected to the wall outlet, even if the unit itself has been turned off.
- Do not look into the lens while the lamp is on.
- Do not place your hand or objects near the ventilation holes. The air coming out is hot.
- Be careful not to catch your fingers by the adjuster when you adjust the height of the projector. Do not push hard on the top of the projector with the adjuster out.

On illumination

- To obtain the best picture, the front of the screen should not be exposed to direct lighting or sunlight.
- Ceiling-mounted spot lighting is recommended. Use a cover over fluorescent lamps to avoid lowering the contrast ratio.
- Cover any windows that face the screen with opaque draperies.
- It is desirable to install the projector in a room where floor and walls are not of light-reflecting material. If the floor and walls are of reflecting material, it is recommended that the carpet and wall paper be changed to a dark color.

On preventing internal heat build-up

After you turn off the power with the I / ⏻ key, do not disconnect the unit from the wall outlet while the cooling fan is still running.

Caution

The projector is equipped with ventilation holes (intake) and ventilation holes (exhaust). Do not block or place anything near these holes, or internal heat build-up may occur, causing picture degradation or damage to the projector.

On cleaning

- To keep the cabinet looking new, periodically clean it with a soft cloth. Stubborn stains may be removed with a cloth lightly dampened with a mild detergent solution. Never use strong solvents, such as thinner, benzene, or abrasive cleansers, since these will damage the cabinet.
- Avoid touching the lens. To remove dust on the lens, use a soft dry cloth. Do not use a damp cloth, detergent solution, or thinner.
- Clean the filter at regular intervals.

On repacking

- Save the original shipping carton and packing material; they will come in handy if you ever have to ship your unit. For maximum protection, repack your unit as it was originally packed at the factory.

On LCD projector

- The LCD projector is manufactured using high-precision technology. You may, however, see tiny black points and/or bright points (red, blue, or green) that continuously appear on the LCD projector. This is a normal result of the manufacturing process and does not indicate a malfunction.

Features

High portability

- **Light weight/small size/simple design**
  This projector has been miniaturized to approx. 2.4 kg (5 lb 5 oz) in weight and B5-file size.
  When the front cover equipped with the control functions is closed, the design of the projector is very simple.
  You can carry it easily with your computer.

Quiet operation

Because the projector uses Sony's unique cooling mechanism, it operates quietly.

High brightness, high picture quality

- **High brightness**
  Adopting the high-efficiency optical system and the 120 W UHP lamp allows high brightness (light output 700 ANSI lumen) and excellent uniformity on the picture.
- **High resolution**
  Three 0.7-inch, about 790,000 pixel, XGA panels provide a resolution of 1,024 × 768 dots for RGB input and 750 horizontal TV lines for video input.

Easy presentation

- **Simple setup with external equipment**
  This projector is preset for 37 kinds of input signals. You can project images from an external signal source just by connecting the equipment with the supplied cable and pushing the APA key.
- **Easy-to-use Remote Commander**
  The Remote Commander is equipped with various convenient keys, including the D ZOOM key for zooming in on the image, the FREEZE key for keeping the image projected even if the equipment is disconnected, and the D KEYSTONE key for correcting trapezoidal distortion of the picture.

Accepts various input signals

- **Scan converter loaded**
  This projector has a build-in scan converter that converts the input signal within 1,024 × 768 dots.
- **Compatible input signals**
  This projector accepts video signals of composite, S video, and component as well as VGA, SVGA, XGA and SXGA signals, which all can be displayed.
- **Compatible with six color systems**
  NTSC, PAL, SECAM, NTSC4.43[1)], PAL-M, or PAL-N color system can be selected automatically or manually.

1)NTSC4.43 is the color system used when playing back a video recorded on NTSC on a NTSC4.43 system VCR.

- Windows is a registered trademark of Microsoft Corporation in the United States and/or other countries.
- VGA, SVGA, XGA and SXGA are registered trademarks of the International Business Machines Corporation, U.S.A.
- Macintosh is a registered trademark of Apple Computer, Inc.
- IBM PC/AT is a registered trademark of International Business Machines Corporation, U.S.A.
- VESA is a registered trademark of Video Electronics Standard Association.
- Display Data Channel is a trademark of Video Electronics Standard Association.
- PC-98 is a trademark of NEC Corporation.

Location and Function of Controls

Front/Side/Bottom

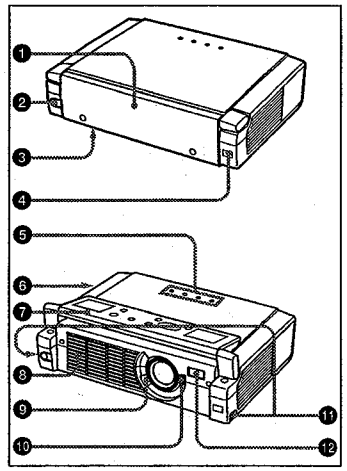

Rear/Left Side

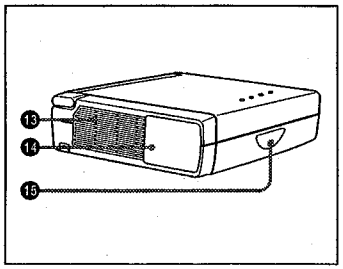

❶ Front cover
Press the OPEN button to open the front cover.

❷ OPEN button

❸ Lamp cover (bottom)

❹ Front remote control detector (SIRCS receiver)

❺ Indicators
- **LAMP/COVER:** Lights up or flashes under the following conditions:
  - Lights up when the lamp has reached the end of its life or becomes a high temperature.
  - Flashes when the lamp cover or air filter cover is not secured firmly.
- **TEMP (Temperature)/FAN:** Lights up or flashes under the following conditions:
  - Lights up when temperature inside the projector becomes unusually high.
  - Flashes when the fan is broken.
- **POWER SAVING:** Lights up when the projector is in power saving mode. When POWER SAVING in the SET SETTING menu is set to ON, the projector goes into power saving mode if no signal is input for 10 minutes. Although the lamp goes out, the cooling fan keeps running. In power saving mode, any key does not function for the first 60 seconds. The power saving mode is canceled when a signal is input or any key is pressed.
- **ON/STANDBY:** Lights up or flashes under the following conditions:
  - Lights in red when a AC power cord is plugged into a wall outlet. Once in standby mode, you can turn on the projector with the I / ⏻ key.
  - Lights in green when the power is turned on.
  - Flashes in green while the cooling fan runs after the power is turned off with the I / ⏻ key. The fan runs for about 90 seconds after the power is turned off.
    The ON/STANDBY indicator flashes quickly for the first 60 seconds. During this time, you cannot light up the ON/STANDBY indicator with the I / ⏻ key.

For details on the LAMP/COVER and the TEMP/FAN indicators, see on pages 32, 33.

❻ Security lock (right side)
Connects to an optional security cable (Kensington's).

> The security lock corresponds to Kensington's MicroSaver Security System.
> If you have any comment, contact:
> Kensington
> 2853 Campus Drive
> San Mates, CA 94403
> U.S.A.
> Tel: 800-535-4242: extension 3348
>
> Home page address:
> http://www.kensington.com/

❼ Control panel
For details, see "Control Panel" on page 10.

❽ Ventilation holes (exhaust)

❾ Focus lever
Adjusts the picture focus.

❿ Zoom lever
Adjusts the picture size.

⓫ Adjuster adjustment buttons
For details,see "How to use the adjuster" on page 10.

⓬ AC IN socket
Connects the supplied AC power cord.

⓭ Ventilation holes (intake)/air filter cover

Notes
- Do not place anything near the ventilation holes as it may cause internal heat build-up.
- Do not place your hand or objects near the ventilation holes as it may cause the air coming out heat build-up.
- To maintain optimal performance, **clean the air filter every 300 hours.**

⓮ Connector panel
For details, see "Connector Panel" on page 11.

⓯ Rear remote control detector (SIRCS receiver)

How to open/close the front cover

To open the front cover
Press the OPEN button.
The front cover is opened and set on the top panel of the projector.

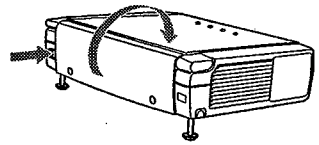

To close the front cover
Restore the front cover by hand.

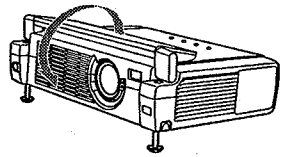

Note
Do not tilt the projector out of the range of the adjuster setting when you open the front cover. If the projector is tilted too much, the front cover opens speedily or slowly.

How to use the adjuster

To adjust the height

Adjust the height of the projector as follows:

1 Lift the projector and press the adjuster adjustment buttons.
The adjusters will extend from the projector.

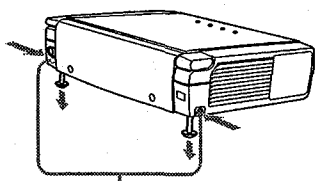

Adjuster adjustment buttons

2 While pressing the buttons, lower the projector. Then, release the buttons.
For fine adjustment, turn the adjusters to the right and the left

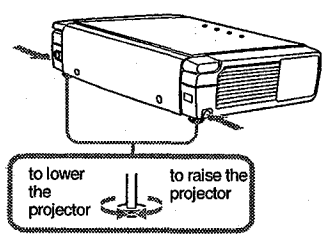

Notes

- Be careful not to let the projector down on your fingers.
- Do not push hard on the top of the projector with the adjusters out. It may be occurred malfunction.

Control Panel

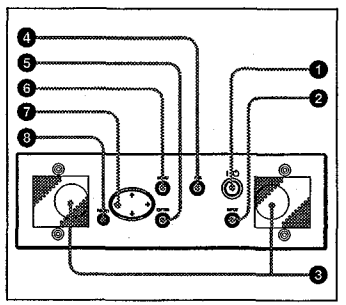

❶ I / ⏻ (on/standby) key

Turns on and off the projector when the projector is in standby mode. The ON/STANDBY indicator lights in green when the power is turned on.
When turning off the power, press the I / ⏻ key twice following the message on the screen, or press and hold the key for about one second.

For details on steps for turning off the power, see "To turn off the power" on page 21.

❷ INPUT key

Selects the input signal. Each time you press the key, the input signal switches as follows:

INPUT A → VIDEO → S VIDEO

❸ Speakers

❹ APA (Auto Pixel Alignment) key

Adjusts a picture clearest automatically while a signal is input from a computer.

❺ ENTER key

Enters the settings of items in the menu system.

❻ MENU key

Displays the on-screen menu. Press again to clear the menu.

❼ Arrow key (↑/↓/←/→)

Select the menu or to make various adjustments.

❽ RESET key

Resets the value of an item back to its factory preset value. This key functions when the menu or a setting item is displayed on the screen.

Connector Panel

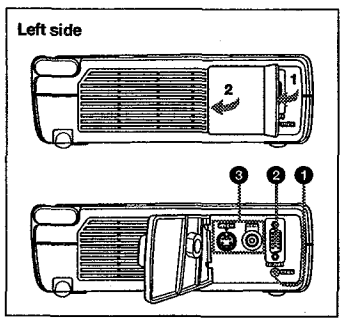

❶ AUDIO (stereo minijack) connector

When listening to sound output from the computer, connect to the audio output of the computer.
When listening to sound output from the VCR, connect to the audio output of the VCR.

❷ INPUT A connector (HD D-sub 15-pin, female)

Connect to external equipment such as a computer.
Connects to the monitor output on a computer using the supplied cable.
When inputting a component or 15k RGB signal, use an optional cable.

❸ Video input connector

Connect to external video equipment such as a VCR.

- **VIDEO (phono type):** Connects to the composite video output of video equipment.
- **S VIDEO (mini DIN 4-pin):** Connects to the S video output (Y/C video output) of video equipment.

Remote Commander

The keys that have the same names as those on the control panel function identically.

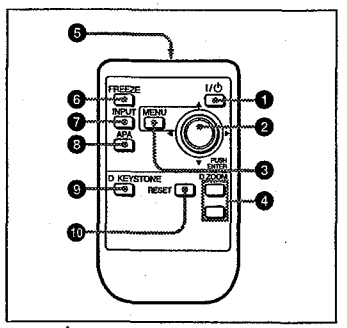

❶ I / ⏻ key

❷ ENTER/arrow key (↑/↓/←/→)

Press the center of the key to use ENTER.

❸ MENU key

❹ D ZOOM +/– key

Enlarges the image at a desired location on the screen.
+: Pressing the + key once displays the icon. This icon indicates the point you want to enlarge. Use an arrow key (↑/↓/←/→) to move the icon to the point to be enlarged. Press the + key repeatedly until the image is enlarged to your requirements.
–: Pressing the – key reduces an image that has been enlarged with the D ZOOM + key.

❺ Infrared transmitter

❻ FREEZE key

Used to freeze the picture projected. To cancel the freeze function, press the key again.

❼ INPUT key

❽ APA (Auto Pixel Alignment) key

❾ D KEYSTONE key

Corrects trapezoidal distortion of the picture. Use the arrow key (↑/↓/←/→) to adjust the angle.

❿ RESET key

Resets the value of items back to its factory preset value or returns the enlarged image back to its original size.

Before using the Remote Commander

Pull out the clear film from the lithium battery holder.

To replace battery

1 Release the lock of the lithium battery holder by picking it, and pull out the holder from the Remote Commander.

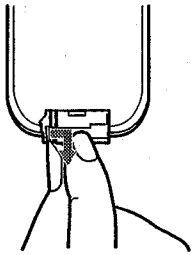

2 Install the lithium battery.

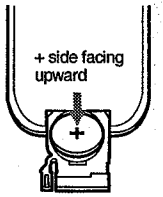

3 Put the lithium battery holder back into the Remote Commander.

Notes on the lithium battery

- Keep the lithium battery out of the reach of children.
- Should the battery be swallowed, immediately consult a doctor.

CAUTION

Danger of explosion if battery is incorrectly replaced. Replace only with the same or equivalent type recommended by the manufacturer.
Dispose of used batteries according to the manufacturer's instructions.

Notes on Remote Commander operation

- Make sure that nothing obstructs the infrared beam between the Remote Commander and the remote control detector on the projector. Direct the Remote Commander toward the front or rear remote control detector.
- The operation range is limited. The shorter the distance between the Remote Commander and the projector is, the wider the angle within which the commander can control the projector becomes.

Installing the Projector

This section describes how to install the projector.
The distance between the lens and the screen varies depending on the size of the screen. Use the following table as a guide.

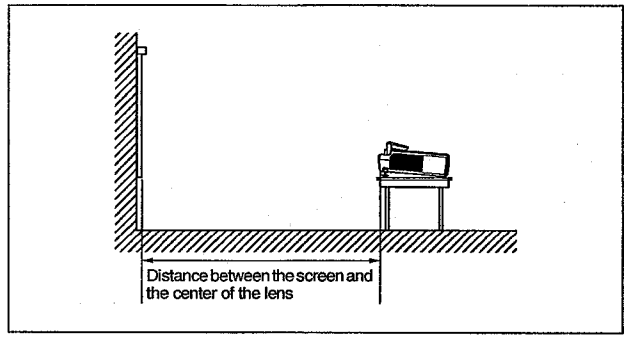

Unit: m (feet)

Screen size (inches)	40	60	80	100	120	150
Minimum Distance	1.6 (5.2)	2.4 (7.9)	3.2 (10.6)	4.1 (13.3)	4.9 (16.0)	6.1 (20.0)
Maximum Distance	1.9 (6.1)	2.8 (9.2)	3.7 (12.2)	4.7 (15.4)	5.6 (18.4)	7.0 (23.1)

Note

You can not install the projector upside down, such as on a ceiling.

Connecting the Projector

When making connections, be sure to do the following:

- Turn off all equipment before making any connections.
- Use the proper cables for each connection.
- Insert the cable plugs properly; plugs that are not fully inserted often generate noise. When pulling out a cable, be sure to pull it out from the plug, not the cable itself.

Connecting with a Computer

This section describes how to connect the projector to a computer.
For more information, refer to the computer's instruction manual.

Notes

- The projector accepts VGA, SVGA, XGA, and SXGA signals. However, we recommend that you set the output mode of your computer to XGA mode for the external monitor.
- If you set your computer, such as a notebook type, to output the signal to both your computer's display and the external monitor, the picture of the external monitor may not appear properly. Set your computer to output the signal to only the external monitor.
  For details, refer to the computer's operating instructions supplied with your computer.
- This projector is compatible with a DDC2B (Digital Data Channel 2B). If your computer is compatible with a DDC, turn the projector on according to the following procedures.

1 Connect the projector to the computer by using the supplied HD D-sub 15 pin cable.
2 Turn the projector on.
3 Start the computer.

To connect an IBM PC/AT compatible computer

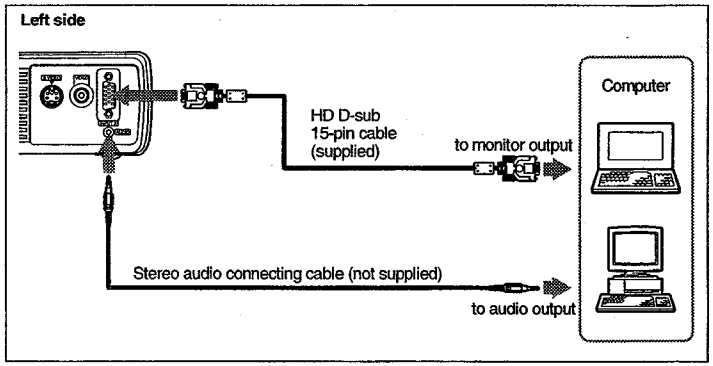

To connect a Macintosh computer

Use an ADP-20 signal adapter (not supplied).

Connecting with a VCR or 15k RGB/Component Equipment

This section describes how to connect the projector to a VCR and 15k RGB/component equipment.
For more information, refer to the instruction manuals of the equipment you are connecting.

To connect a VCR

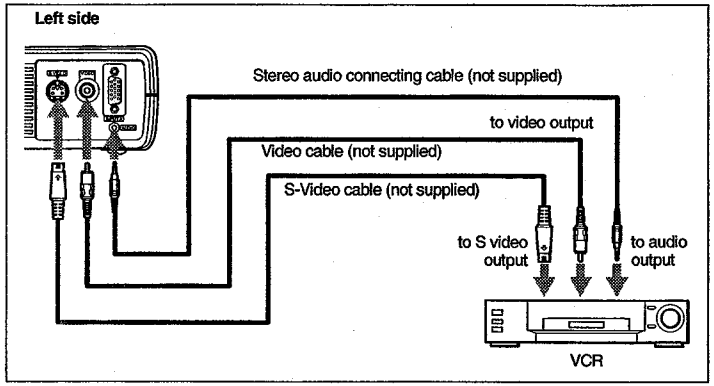

To connect a 15k RGB/Component equipment

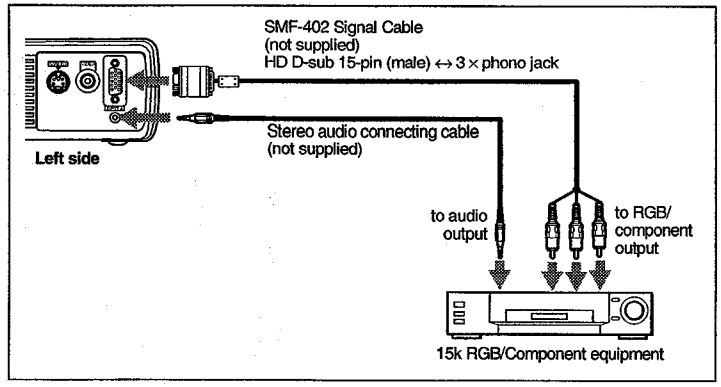

Notes

- Set the aspect ratio using ASPECT in the INPUT SETTING menu according to the input signal.
- When you connect the unit to 15k RGB or component video equipment, select video GBR or component with the INPUT-A setting in the SET SETTING menu.
- Use the composite sync signal when you input the external sync signal from 15k RGB/component equipment.

Selecting the Menu Language

You can select one of seven languages for displaying the menu and other on-screen displays. The factory setting is English.

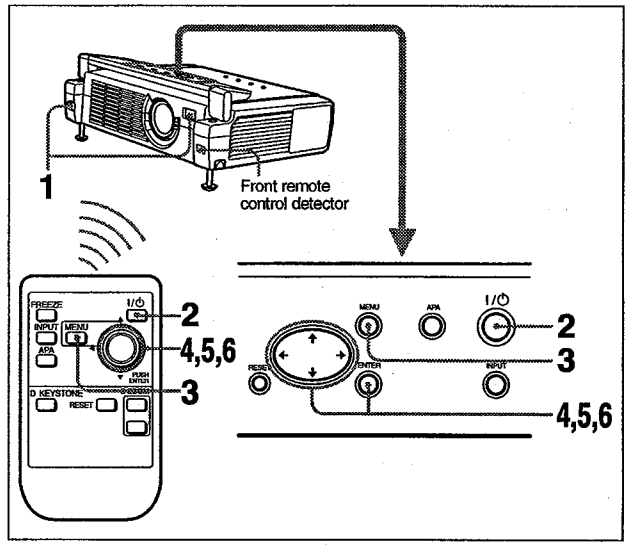

1 Open the front cover, then plug the AC power cord into a wall outlet.

2 Press the I / ⏻ key to turn on the projector.

3 Press the MENU key.
The menu appears.
The menu presently selected is shown as a yellow button.

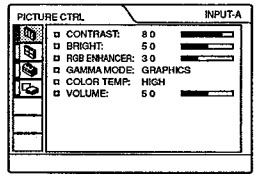

4 Press the ↑ or ↓ key to select the SET SETTING menu, then press the → or ENTER key.
The selected menu appears.

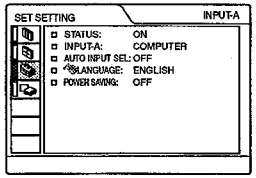

5 Press the ↑ or ↓ key to select "LANGUAGE," then press the → or ENTER key.

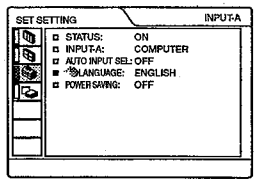

6 Press the ↑ or ↓ key to select a language, then press the ← or ENTER key.
The menu changes to the selected language.

To clear the menu

Press the MENU key.
The menu disappears automatically if a key is not pressed for one minute.

Projecting

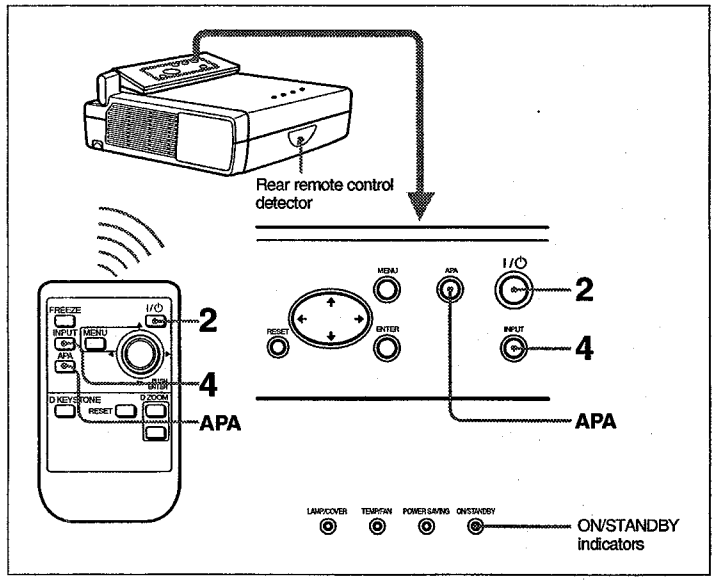

1 Open the front cover, plug the AC power cord into a wall outlet, then connect all equipment.
The ON/STANDBY indicator lights in red and the projector goes into standby mode.

2 Press the I / ⏻ key.
The ON/STANDBY indicator lights in green.

3 Turn on the equipment connected to the projector.

4 Press the INPUT key to select the input source.

To input from	Press INPUT to display
Computer connected to the INPUT A connector	INPUT A
Video equipment connected to the VIDEO input connector	VIDEO
Video equipment connected to the S VIDEO input connector	S VIDEO

5 Turn the zoom lever to adjust the size of the picture.

6 Turn the focus lever to adjust the focus.

Caution

Looking into the lens when projecting may cause injury to your eyes.

To adjust the volume

The volume can be adjusted in the on-screen menu. See "VOLUME" in the PICTURE CTRL menu on page 25.

To get the clearest picture

You can adjust picture quality when projecting a signal from the computer.

1 Project a still picture from the computer.

2 Press the APA key.
"Complete!" appears on the screen when the picture is adjusted properly.

Notes

- Press the APA key when the full image is displayed on the screen. If there are black edges around the image, the APA function will not function properly and the image may extend beyond the screen.
- When you switch the input signal or re-connect a computer, press the APA key again to adjust the picture again.
- You can cancel the adjustment by pressing the APA key again while "ADJUSTING" appears on the screen.
- The picture may not be adjusted properly depending on the kinds of input signals.
- Adjust the items in the INPUT SETTING menu when you adjust the picture manually.

To turn off the power

1 Press the I / ⏻ key.
"POWER OFF? Please press I / ⏻ key again." appears to confirm that you want to turn off the power.

Note

A message disappears if you press any key except the I / ⏻ key, or if you do not press any key for five seconds.

2 Press the I / ⏻ key again.
The ON/STANDBY indicator flashes in green and the fan continues to run for about 90 seconds to reduce the internal heat. Also, the ON/STANDBY indicator flashes quickly for the first 60 seconds. During this time, you will not be able to light up the ON/STANDBY indicator with the I / ⏻ key.

3 Unplug the AC power cord from the wall outlet after the fan stops running and the ON/STANDBY indicator lights in red.

When you cannot confirm the on-screen message

When you cannot confirm the on-screen message in a certain condition, you can turn off the power by holding the I / ⏻ key for about one second.

Note

Do not unplug the AC power cord while the fan is still running; otherwise, the fan will stop even though the internal heat is still high, which could result in a breakdown of the projector.

On air filter

To maintain optimal performance, **clean the air filter every 300 hours.**

Effective Tools for Your Presentation

To enlarge the image (Digital Zoom function)

You can select a point in the image to enlarge. This function works only when a signal from a computer is input.

1 Press the D ZOOM + key on the Remote Commander.
The digital zoom icon appears the center of the image.

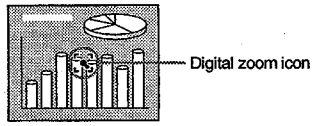

2 Move the icon to the point on the image you want to enlarge. Use the arrow key (↑/↓/←/→) to move the icon.

3 Press the D ZOOM + key again.
The image where the icon is located is enlarged. The enlargement ratio is displayed on the screen for a few seconds.
By pressing the + key repeatedly, the image size increases (ratio of enlargement: max. 4 times.)

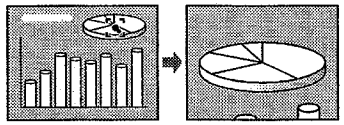

Use the arrow key (↑/↓/←/→) to scroll the enlarged image.

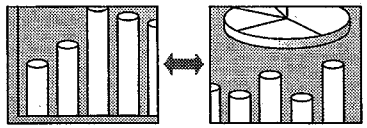

To return the image back to its original size

Press the D ZOOM – key.
Just pressing the RESET key returns the image back to its original size immediately.

To freeze the image projected (Freeze function)

Press the FREEZE key. "FREEZE" appears when the key is pressed. This function works only when a signal from a computer is input.
To restore the original screen, press the FREEZE key again.

Using the MENU

The projector is equipped with an on-screen menu for making various adjustments and settings. You can change the menu language displayed in the on-screen menu.

To change the menu language, see "Selecting the Menu Language" on page 17.

1 Press the MENU key.
The menu appears.
The menu presently selected is shown as a yellow button.

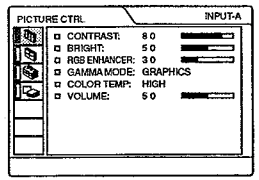

2 Use the ↑ or ↓ key to select a menu, then press the → or ENTER key.
The selected menu appears.

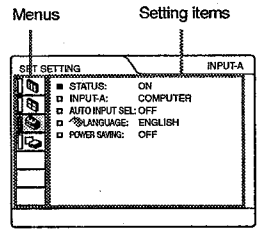

3 Select an item.
Use the ↑ or ↓ key to select the item, then press the → or ENTER key.

4 Make the setting or adjustment on an item.

- When changing the adjustment level:
  To increase the number, press the ↑ or → key.
  To decrease the number, press the ↓ or ← key.
  Press the ENTER key to restore the original screen.
- When changing the setting:
  Press the ↑ or ↓ key to change the setting.
  Press the ENTER or ← key to restore the original screen.

To clear the menu

Press the MENU key.
The menu disappears automatically if a key is not pressed for one minute.

To reset items that have been adjusted

Press the RESET key.
"Complete!" appears on the screen and the settings appearing on the screen are reset to their factory preset values.
Items that can be reset are:

- "CONTRAST," "BRIGHT," "COLOR," "HUE," "SHARP", and "RGB ENHANCER" in the PICTURE CTRL menu
- "DOT PHASE," "SIZE H," and "SHIFT" in the INPUT SETTING menu
- "DIGIT KEYSTONE" in the INSTALL SETTING menu.

About the memory of the settings

The settings are automatically stored in the projector memory.

If no signal is input

If there is no input signal, "NO INPUT– Cannot adjust this item." appears on the screen.

About the menu display

You can set the display position of the menu, intensity of the background picture and tone of the menu items as you like.

For details, see page 28.

The PICTURE CTRL Menu

The PICTURE CTRL (control) menu is used for adjusting the picture.
Items that cannot be adjusted depending on the input signal are not displayed in the menu.

For details on the unadjustable items, see page 37.

When the video signal is input

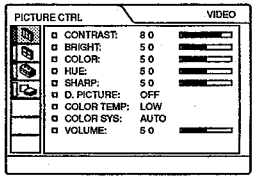

When the RGB signal is input

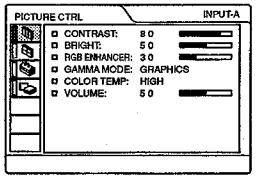

Menu Items

CONTRAST

Adjusts the picture contrast. The higher the setting, the greater the contrast. The lower the setting, the lower the contrast.

BRIGHT

Adjusts the picture brightness. The higher the setting, the brighter the picture. The lower the setting, the darker the picture.

COLOR

Adjusts color intensity. The higher the setting, the greater the intensity. The lower the setting, the lower the intensity.

HUE

Adjusts color tones. The higher the setting, the picture becomes greenish. The lower the setting, the picture becomes purplish.

SHARP

Adjusts the picture sharpness. The higher the setting, the sharper the picture. The lower the setting, the softer the picture.

RGB ENHANCER

Adjusts the picture sharpness when RGB signals are input.
The higher the setting, the sharper the picture. The lower the setting, the softer the picture.

D. (Dynamic) PICTURE

Emphasizes the black color.

ON: Emphasizes the black color to produce a bolder "dynamic" picture.

OFF: Reproduces the dark portions of the picture accurately, in accordance with the source signal.

GAMMA MODE

Selects a gamma correction curve.

GRAPHICS: Improves the reproduction of halftones. Photos can be reproduced in natural tones.

TEXT: Contrasts black and white. Suitable for images that contain lots of text.

COLOR TEMP

Adjusts the color temperature.

HIGH: Makes the white color bluish.

LOW: Makes the white color reddish.

COLOR SYS (System)

Selects the color system of the input signal.

- **AUTO:** NTSC3.58, PAL, SECAM and NTSC4.43 (switched automatically)
- **PAL-M/N:** PAL-M/PAL-N and NTSC3.58 (switched automatically)

Normally, set to AUTO. If the picture is distorted or colorless, select the color system according to the input signal.

VOLUME

Adjusts the volume. The volume can be adjusted for each of INPUT A, VIDEO and S VIDEO input.

The INPUT SETTING Menu

The INPUT SETTING menu is used to adjust the input signal.
Items that cannot be adjusted depending on the input signal are not displayed in the menu.

For details on the unadjustable items, see page 37.

When the video signal is input

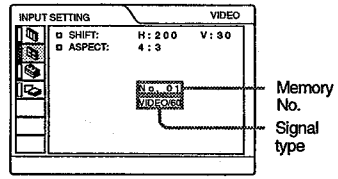

When the RGB signal is input

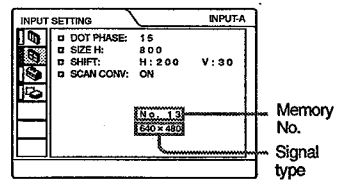

MENU Items

DOT PHASE

Adjusts the dot phase of the LCD panel and the signal input from the INPUT A connector.
Adjust the picture further for finer picture after the picture is adjusted by pressing the APA key.
Adjust the picture to where it looks clearest.

SIZE H

Adjusts the horizontal size of picture input from the INPUT A connector. The higher the setting, the larger the horizontal size of the picture. The lower the setting, the smaller the horizontal size of the picture. Adjust the setting according to the dots of the input signal.

For details on the suitable value for the preset signals, see page 38.

SHIFT

Adjusts the position of the picture input from the INPUT A connector. H adjusts the horizontal position of the picture.V adjusts the vertical position of the picture. As the setting for H increases, the picture moves to the right, and as the setting decreases, the picture moves to the left.
As the setting for V increases, the picture moves up, and as the setting decreases, the picture moves down. Use the ← or the → key to adjust the horizontal position and the ↑ and ↓ key for the vertical position.

SCAN CONV (Scan converter)

Converts the signal to display the picture according to the screen size.

ON: Displays the picture according to the screen size. The picture will lose some clarity.

OFF: Displays the picture while matching one pixel of input picture element to that of the LCD. The picture will be clear but the picture size will be smaller.

Note

When XGA or SXGA signal is input, this item will not be displayed.

ASPECT

Sets the aspect ratio of the picture. When inputting 16:9 (squeezed) signal from equipment such as a DVD player, set to 16:9.

4:3: When the picture with ratio 4:3 is input.

16:9: When the picture with ratio 16:9 (squeezed) is input.

About the Preset Memory No.

This projector has 37 types of preset data for input signals (the preset memory). When a preset signal is input, the projector automatically detects the signal type and recalls the data for the signal from the preset memory to adjust it to an optimum picture. The memory number and signal type of that signal are displayed in the INPUT SETTING menu. You can also adjust the preset data through the INPUT SETTING menu.
This projector has 20 types of user memories for INPUT-A into which you can save the setting of the adjusted data for an unpreset input signal.
When an unpreset signal is input for the first time, a memory number is displayed as 0. When you adjust the data of the signal in the INPUT SETTING menu, it will be registered to the projector. If more than 20 user memories are registered, the newest memory always overwrites the oldest one.

See the chart on page 38 to find if the signal is registered to the preset memory.

Since the data is recalled from the preset memory about the following signals, you can use these preset data by adjusting SIZE H. Make fine adjustment by adjusting SHIFT.

Signal	Memory No.	SIZE
Super Mac-2	23	1312
SGI-1	23	1320
Macintosh 19"	25	1328
Macintosh 21"	27	1456
Sony News	36	1708
PC9821 1280×1024	36	1600
WS Sunmicro	37	1664

Note

When the aspect ratio of input signal is other than 4:3, a part of the screen is displayed in black.

The SET SETTING Menu

The SET SETTING menu is used for changing the settings of the projector.

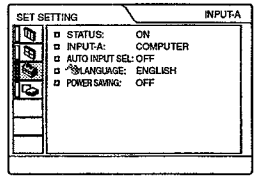

Menu Items

STATUS (on-screen display)

Sets up the on-screen display.

ON: Shows all of the on-screen displays.

OFF: Turns off the on-screen displays except for the menus, a message when turning off the power, and warning messages.

INPUT-A

Selects the computer, component or video GBR signal input from the INPUT A connector.

Note

If the setting is not correct, "Please check INPUT-A setting." appears on the screen and the color of the picture becomes strange or the picture is not displayed.

AUTO INPUT SEL

When set to ON, the projector detects input signals in the following order: INPUT-A/ VIDEO/S-VIDEO. It indicates the input channel when the power is turned on or the INPUT key is pressed.

LANGUAGE

Selects the language used in the menu and on-screen displays. Available languages are: English, French, German, Italian, Spanish, Japanese and Chinese.

POWER SAVING

When set to ON, the projector goes into power saving mode if no signal is input for 10 minutes.

The INSTALL SETTING Menu

The INSTALL SETTING menu is used for changing the settings of the projector.

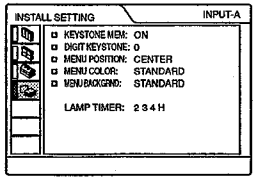

Menu Items

KEYSTONE MEM

ON: DIGIT KEYSTONE setting is stored. The data is retrieved when the projector power is turned on. The setting will remain the same every time.

OFF: DIGIT KEYSTONE is reset to 0 when the power is turned on next time.

DIGIT KEYSTONE

Corrects the trapezoidal distortion caused by the projection angle.

When the upside of the trapezoid is longer than the downside ▽ **:** Sets to a plus value.

MENU POSITION

Selects the display position of the menu from TOP LEFT, BOTTOM LEFT, CENTER, TOP RIGHT and BOTTOM RIGHT.

MENU COLOR

Selects the tone of the menu display from STANDARD, WARM, COOL, GREEN or GRAY.

MENU BACKGRND

Selects the intensity of the background picture of the menu display from DARK, STANDARD or LIGHT.

LAMP TIMER

Indicates how long the lamp has been turned on.

Note

This only displays the time. You cannot alter the display.

Maintenance

Replacing the Lamp

When the lamp has burnt out or dims, or "Please replace the LAMP." appears on the screen, replace the lamp with a new one. Use LMP-C121 Projector Lamp as the replacement lamp. The lamp life varies depending on conditions of use.

When replacing the lamp after using the projector

Turn off the projector, then unplug the power cord.
Wait for at least an hour for the lamp to cool.

Caution

The lamp becomes a high temperature after turning off the projector with the I / ⏻ key. If you touch the lamp, you may scald your finger. When you replace the lamp, wait for at least an hour for the lamp to cool.

1 Place a protective sheet (cloth) beneath the projector. Turn the projector over so you can see its underside.

Note

Be sure that the projector is stable after turning it over.

2 Open the lamp cover by loosening a screw with the Phillips screwdriver (supplied with the Projector Lamp).

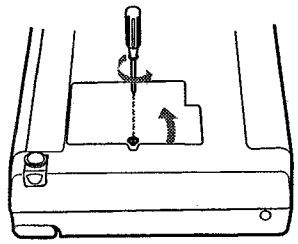

Note

For safety sake, do not loosen any other screws.

3 Loosen the screws on the lamp unit with the Phillips screwdriver. Pull out the lamp unit by the handle.

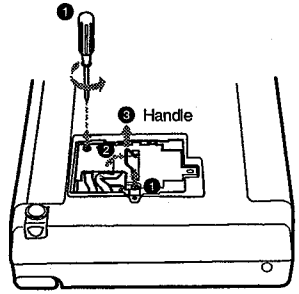

4 Insert the new lamp all the way in until it is securely in place. Tighten the screws. Fold up the handle.

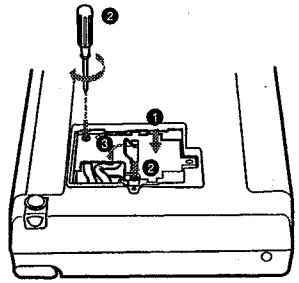

Notes

- Be careful not to touch the glass surface of the lamp.
- The power will not turn on if the lamp is not secured properly.

5 Close the lamp cover and tighten the screws.

6 Turn the projector back over.

7 Connect the power cord and turn the projector to standby mode.

8 Press the following keys on the control panel in the following order for less than five seconds each: RESET, ←, →, ENTER.

Notes

- Be sure to use the LMP-C121 Projector Lamp for replacement. If you use lamps other than LMP-C121, the projector may cause a malfunction.
- Be sure to turn off the projector and unplug the power cord before replacing the lamp.
- Do not put your hands into the lamp replacement spot, or not fall any liquid or object into it to avoid electrical shock or fire.

Cleaning the Air Filter

The air filter should be cleaned every 300 hours.
Remove dust from the outside of the ventilation holes with a vacuum cleaner.

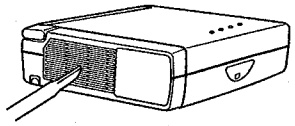

When it becomes difficult to remove the dust from the filter with a vacuum cleaner, remove the air filter and wash it.

1 Turn off the power and unplug the power cord.

2 Remove the air filter cover.

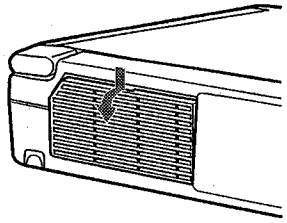

3 Remove the air filter.

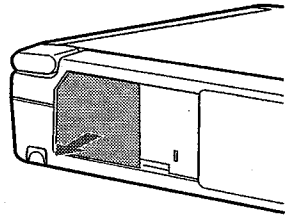

4 Wash the air filter with a mild detergent solution and dry it in a shaded place.

5 Attach the air filter and replace the cover.

Notes

- If the dust cannot be removed from the air filter, replace the air filter with the supplied new one.
- Be sure to attach the air filter cover firmly; the power will not be turned on if it is not closed securely.
- The air filter has a face and a reverse side. Place the air filter so that it fits in a notch on the air filter cover.

Troubleshooting

If the projector appears to be operating erratically, try to diagnose and correct the problem using the following instructions. If the problem persists, consult with qualified Sony personnel.

Power

Symptom	Cause and Remedy
The power is not turned on.	• The power has been turned off and on with the I / ⏻ key at a short interval. → Wait for about 90 seconds before turning on the power (see page 21). • The lamp cover is detached. → Close the lamp cover securely (see page 29). • The air filter cover is detached. → Close the air filter cover securely (see page 30).
Both the LAMP/COVER and TEMP/FAN indicators light up.	• The electrical system breaks down. → Consult with qualified Sony personnel.

Picture

Symptom	Cause and Remedy
No picture.	• Cable is disconnected or the connections are wrong. → Check that the proper connections have been made (see page 14). • Input selection is incorrect. → Select the input source correctly using the INPUT key (see page 19). • The computer signal is not set to output to an external monitor. → Set the computer signal to output to an external monitor (see page 14). • The computer signal is set to output to both the LCD of the computer and external monitor. → Set the computer signal to output only to the external monitor (see page 14).
The picture is noisy.	• Noise may appear on the background depending on the combination of the numbers of dot input from the connector and numbers of pixel on the LCD panel. → Change the desktop pattern on the connected computer.
The picture from INPUT A connector is colored strange.	• Setting for INPUT-A in the SET SETTING menu is incorrect. → Select COMPUTER, VIDEO GBR or COMPONENT for INPUT-A in the SET SETTING menu according to the input signal (see page 27).
"Please check INPUT-A setting." appears in spite of inputting the correct signal from INPUT A.	• Setting for INPUT-A in the SET SETTING menu is incorrect. → Select COMPUTER, VIDEO GBR or COMPONENT for INPUT-A in the SET SETTING menu according to the input signal (see page 27).
On-screen display does not appear.	• STATUS in the SET SETTING menu has been set to OFF. → Set STATUS in the SET SETTING menu to ON (see page 27).

Symptom	Cause and Remedy
Color balance is incorrect.	• Picture has not been adjusted properly. → Adjust the picture (see page 24). • Projector is set to wrong color system. → Set COLOR SYS in the PICTURE CTRL menu to match the color system being input (see page 25).
The picture is too dark.	• Contrast or brightness has not been adjusted properly. → Adjust the contrast or brightness in the PICTURE CTRL menu properly (see page 24).
The picture is not clear.	• Picture is out of focus. → Adjust the focus (see page 20). • Condensation has occurred on the lens. → Leave the projector for about two hours with the power on.
The picture appears too small on the screen.	• SHIFT in the INPUT SETTING menu has not been adjusted properly. → Adjust SHIFT in the INPUT SETTING menu properly (see page 26).
The picture flickers.	• DOT PHASE in the INPUT SETTING menu has not been adjusted properly. → Adjust DOT PHASE in the INPUT SETTING menu properly (see page 25).

Sound

Symptom	Cause and Remedy
No sound.	• Cable is disconnected or the connections are wrong. → Check that the proper connections have been made (see page 14).
When sound is input through AUDIO connector, sound comes through one channel only.	• Monaural sound is being input through the AUDIO connector. → Input stereo sound.

Remote Commander

Symptom	Cause and Remedy
The Remote Commander does not work.	• The Remote Commander batteries are dead. → Replace with a new battery (see page 12).

Others

Symptom	Cause and Remedy
The LAMP/COVER indicator flashes.	• The lamp cover or the air filter cover is detached. → Attach the cover securely (see page 29).
The LAMP/COVER indicator lights up.	• The lamp has reached the end of its life. → Replace the lamp (see page 29). • The lamp becomes a high temperature. → Wait for 90 seconds to cool down the lamp and turn on the power again (see page 21).

Symptom	Cause and Remedy
The TEMP/FAN indicator flashes.	• The fan is broken. → Consult with qualified Sony personnel.
The TEMP/FAN indicator lights up.	• The internal temperature is unusually high. → Check to see if nothing is blocking the ventilation holes.
Both the LAMP/COVER and TEMP/FAN indicators light up.	• The electrical system breaks down. → Consult with qualified Sony personnel.

Warning Messages

Use the list below to check the meaning of the messages displayed on the screen.

Message	Meaning and Remedy
High temp.! Lamp off in 1 min.	• Internal temperature is too high. → Turn off the power. → Check to see if nothing is blocking the ventilation holes.
Frequency is out of range!	• This input signal cannot be projected as the frequency is out of the acceptable range of the projector. → Input a signal that is within the range of the frequency. • The resolution setting of the output signal of a computer is too high. → Set the setting of output to XGA (see page 14).
Please check INPUT-A setting.	• You have input RGB signal from the computer when INPUT-A in the SET SETTING menu is set to COMPONENT. → Set INPUT-A correctly (see page 27).
Please replace the LAMP.	• It is time to replace the lamp. → Replace the lamp.

Caution Messages

Use the list below to check the meaning of the messages displayed on the screen.

Message	Meaning and Remedy
NO INPUT	• No input signal → Check connections (see page 14).
Not applicable!	• You have pressed the wrong key. → Press the appropriate key.

Notes on Installation

Unsuitable Installation

Do not install the projector in the following situations. These installations may cause malfunction or damage to the projector.

Poorly ventilated

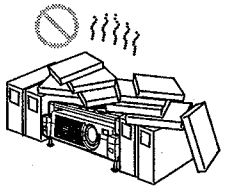

- Allow adequate air circulation to prevent internal heat build-up. Do not place the unit on surfaces (rugs, blankets, etc.) or near materials (curtains, draperies) that may block the ventilation holes. When the internal heat builds up due to the block-up, the temperature sensor will function with the message "High temp.! Lamp off in 1 min." The power will be turned off automatically after one minute.
- Leave space of more than 30 cm (11 7/8 inches) around the unit.
- Be careful that the ventilation holes may inhale tininess such as a piece of paper.

Highly heated and humid

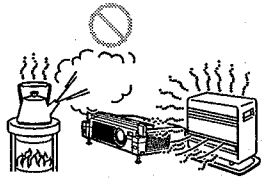

- Avoid installing the unit in a location where the temperature or humidity is very high, or temperature is very low.
- To avoid moisture condensation, do not install the unit in a location where the temperature may rise rapidly.

Very dusty

Avoid installing the unit in a location where there is a lot of dust; otherwise, the air filter will be obstructed. The dust blocking the air through the filter may cause raising the internal heat of the projector. Clean it up periodically.

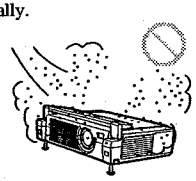

Unsuitable Conditions

Do not use the projector under the following conditions.

Toppling the unit

Avoid using as the unit topples over on its side. It may cause malfunction.

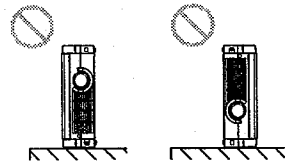

Tilting the unit out of the range of the adjuster setting

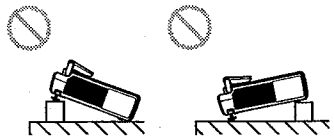

Do not install the unit other than on the floor. Avoid using when the unit is tilted out of the range of the adjuster setting. Such installation may cause malfunction.

Blocking the ventilation holes

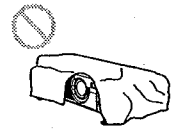

Avoid using something to cover over the ventilation holes (exhaust/intake); otherwise, the internal heat may build up.

Specifications

Optical characteristics

Projection system	3 LCD panels, 1 lens, projection system
LCD panel	0.7-inch TFT LCD panel with micro-lens array, 2,359,296 pixels (786,432 pixels × 3)
Lens	1.3 times zoom lens f 28.4 to 34.0 mm/F 1.8 to 2.2
Lamp	120 W UHP
Projection picture size	Range: 40 to 150 inches (diagonal measure)
Light output	ANSI lumen[1] 700 lm
Throwing distance	When the XGA signal is input 40-inch: 1593 to 1845 mm (62 5/8 to 72 7/8 inches) 60-inch: 2413 to 2789 mm (95 to 109 7/8 inches) 80-inch: 3232 to 3733 mm (127 1/4 to 146 7/8 inches) 100-inch: 4051 to 4677 mm (159 1/2 to 184 3/8 inches) 120-inch: 4870 to 5621 mm (191 7/8 to 221 3/8 inches) 150-inch: 6099 to 7037 mm (240 1/4 to 277 1/4 inches)

1) ANSI lumen is a measuring method of American National Standard IT 7.228.

Electrical characteristics

Color system	NTSC3.58/PAL/SECAM/NTSC4.43/PAL-M/PAL-N system, switched automatically/manually
Resolution	750 horizontal TV lines (Video input) 1,024 × 768 dots (RGB input)
Acceptable computer signals	fH: 15 to 92 kHz fV: 48 to 85 Hz
Speaker	Stereo speakers system, 28 mm (1 1/8 inches) diameter, max. 0.5 W × 2

Input/Output

Video input VIDEO: phono type
Composite video: 1 Vp-p ±2 dB sync negative (75 ohms terminated)
S VIDEO: Y/C mini DIN 4-pin type (male)
Y (luminance): 1 Vp-p ±2 dB sync negative (75 ohms terminated)
C (chrominance): burst 0.286 Vp-p ±2 dB (NTSC) (75 ohms terminated), burst 0.3 Vp-p ±2 dB (PAL) (75 ohms terminated)

INPUT A HD D-sub15-pin (female)
Analog RGB/component:
R/R-Y: 0.7 Vp-p ±2 dB (75 ohms terminated)
G: 0.7 Vp-p ±2 dB (75 ohms terminated)
G with sync/Y: 1 Vp-p ±2 dB sync negative (75 ohms terminated)
B/B-Y: 0.7 Vp-p ±2 dB (75 ohms terminated)
SYNC/HD:
Composite sync input: 1-5 Vp-p high impedance, positive/negative
Horizontal sync input: 1-5 Vp-p high impedance, positive/negative
VD:
Vertical sync input: 1-5 Vp-p high impedance, positive/negative

AUDIO Stereo minijack
500 mVrms, impedance more than 47 kilohms

Safety regulations
UL1950, cUL (CSA No. 950), FCC Class B, IC Class B, NEMKO (EN60950), CE (LVD, EMC), C-Tick

General

Dimensions 275 × 65 × 214 mm (10 7/8 × 2 5/8 × 8 1/2 inches) (w/h/d) (with the front cover closed, without the projection parts)

Mass Approx. 2.4 kg (5 lb 5 oz)

Power requirements
AC 100 to 240 V, 1.9–0.8A, 50/60 Hz

Power consumption
Max. 190 W
(Standby mode: 5 W)

Heat dissipation
648.4 BTU

Operating temperature
0°C to 35°C (32°F to 95°F)

Operating humidity
35% to 85% (no condensation)

Storage temperature
–20°C to 60°C (–4°F to 140°F)

Storage humidity
10% to 90%

Supplied accessories
Remote Commander RM-PJ2 (1)
Lithium battery CR2025 (1)
HD D-sub 15 pin cable (2 m) (1) (1-791-992-21)
Carrying case (1)
AC power cord (1)
Air filter (for replacement) (1)
Operating Instructions (1)
Quick Reference Card (1)
Ferrite core (1)

Design and specifications are subject to change without notice.

Optional accessories

Projector Lamp
LMP-C121 (for replacement)

Signal Cable SMF-402 (HD D-sub 15-pin (male) ⟷ 3 × phono type (male))

Monitor Cable SMF-410 (HD D-sub 15 pin (male) ⟷ HD D-sub 15 pin (male))

Signal Adapter
ADP-20 (Macintosh ⟷ HD D-sub 15-pin)

Screens 50-inch Portable Screen VPS-50C[1)]
100-inch Flat Screen VPS-100FH

Some of the items may not be available in some areas. For details, please consult your nearest Sony office.

1) VPS-50C may not be available in some areas. For details, please consult your nearest Sony office.

Pin assignment

INPUT A connector (HD D-sub 15-pin, female)

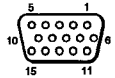

1	R/R-Y	9	N.C.
2	G/Y	10	GND
3	B/B-Y	11	GND
4	GND	12	DDC/SDA
5	GND	13	HD/C.Sync
6	GND (R)	14	VD
7	GND (G)	15	DDC/SCL
8	GND (B)		

Input signals and adjustable/setting items

PICTURE CTRL menu

Item	Input signal				
	Video or S video (Y/C)	Component	Video GBR	Computer	B&W
CONTRAST	●	●	●	●	●
BRIGHT	●	●	●	●	●
COLOR	●	●	●	–	–
HUE	● (NTSC 3.58/4.43 only)	●	●	–	–
SHARP	●	●	●	–	●
RGB ENHANCER	–	–	–	●	–
D. PICTURE	●	●	●	–	●
GAMMA MODE	–	–	●	●	–
COLOR TEMP	●	●	●	●	●
COLOR SYS	●	–	–	–	●
VOLUME	●	●	●	●	●

● : Adjustable/can be set
– : Not adjustable/cannot be set

INPUT SETTING menu

Item	Input signal				
	Video or S video (Y/C)	Component	Video GBR	Computer	B&W
DOT PHASE	–	–	–	●	–
SIZE H	–	–	–	●	–
SHIFT	●	●	●	●	●
SCAN CONV	–	–	–	● (lower than VGA)	–
ASPECT	●	●	●	–	●

● : Adjustable/can be set
– : Not adjustable/cannot be set

Preset signals

Memory No.	Preset signal		fH (kHz)	fV (Hz)	Sync	SIZE
1	Video 60 Hz		15.734	59.940		
2	Video 50 Hz		15.625	50.000		
3	15k RGB/Component 60 Hz		15.734	59.940	S on G/Y or Composite Sync	
4	15k RGB/Component 50 Hz		15.625	50.000	S on G/Y or Composite Sync	
6	640 × 350	VGA mode 1	31.469	70.086	H-pos, V-neg	800
7		VGA VESA 85 Hz	37.861	85.080	H-pos, V-neg	832
8	640 × 400	PC-9801 Normal	24.823	56.416	H-neg, V-neg	848
9		VGA mode 2	31.469	70.086	H-neg, V-pos	800
10		VGA VESA 85 Hz	37.861	85.080	H-neg, V-pos	832
11	640 × 480	VGA mode 3	31.469	59.940	H-neg, V-neg	800
12		Macintosh 13"	35.000	66.667	H-neg, V-neg	864
13		VGA VESA 72 Hz	37.861	72.809	H-neg, V-neg	832
14		VGA VESA 75 Hz	37.500	75.000	H-neg V-neg	840
15		VGA VESA 85 Hz	43.269	85.008	H-neg V-neg	832
16	800 × 600	SVGA VESA 56 Hz	35.156	56.250	H-pos, V-pos	1024
17		SVGA VESA 60 Hz	37.879	60.317	H-pos, V-pos	1056
18		SVGA VESA 72 Hz	48.077	72.188	H-pos, V-pos	1040
19		SVGA VESA 75 Hz	46.875	75.000	H-pos, V-pos	1056
20		SVGA VESA 85 Hz	53.674	85.061	H-pos, V-pos	1048
21	832 × 624	Macintosh 16"	49.724	74.550	H-neg, V-neg	1152
22	1024 × 768	XGA VESA 43 Hz	35.522	43.479	H-pos, V-pos	1264
23		XGA VESA 60 Hz	48.363	60.004	H-neg V-neg	1344
24		XGA VESA 70 Hz	56.476	70.069	H-neg V-neg	1328
25		XGA VESA 75 Hz	60.023	75.029	H-pos, V-pos	1312
26		XGA VESA 85 Hz	68.677	84.997	H-pos, V-pos	1376
27	1152 × 864	SXGA VESA 70 Hz	63.995	70.016	H-pos, V-pos	1472
28		SXGA VESA 75 Hz	67.500	75.000	H-pos, V-pos	1600
29		SXGA VESA 85 Hz	77.487	85.057	H-pos, V-pos	1568
30	1152 × 900	Sunmicro LO	61.795	65.960	H-neg, V-neg	1504
31		Sunmicro HI	71.713	76.047	H-neg, V-neg	1472
32	1280 × 960	SXGA VESA 60 Hz	60.000	60.000	H-pos, V-pos	1800
33		SXGA VESA 75 Hz	75.000	75.000	H-pos, V-pos	1728
34	1280 × 1024	SXGA VESA 43 Hz	46.433	43.436	H-pos, V-pos	1696
35		SGI-5	53.316	50.062	S on G	1680
36		SXGA VESA 60 Hz	63.974	60.013	H-pos, V-pos	1696
37		SXGA VESA 75 Hz	79.976	75.025	H-pos, V-pos	1688
38		SXGA VESA 85 Hz	91.146	85.024	H-pos, V-pos	1296

Note

Whan a signal other than the preset signals shown above is input, the picture may not appear properly.

Warning on power connection

Use a proper power cord for your local power supply.

	The United States, Canada	Continental Europe	UK	Australia	Japan
Plug type	YP-11	YP-21	SP-61	B8	YP-13
Female end	YC-13L	YC-13L	YC-13L	C7-2	YC-13L
Cord type	SPT-2	H03VVH2-F	H03VVH2-F	H03VVH2-F	VFF
Rated Voltage & Current	10A/125V	2.5A/250V	2.5A/250V	2.5A/250V	7A/125V
Safety approval	UL/CSA	VDE	BS	SAA	DENTORI

Index

A

Adjuster 10
Adjusting
  memory of the settings 23
  the picture 20, 24
  the picture size/shift ... 26
Air filter 30
ASPECT 26
AUTO INPUT SEL 27

B

Battery
  installation 12
  notes 12
BRIGHT 24

C

COLOR 24
COLOR SYS (System) .. 25
COLOR TEMP 24
Connections
  component equipment 15
  computer 14
  VCR 15
CONTRAST 24

D

D. (Dynamic) PICTURE 24
Digital Zoom function 22
DOT PHASE 25

G

GAMMA MODE 24

H

HUE 24

I

INPUT A connector 11
  pin assignment 37
INPUT SETTING menu 25
INPUT-A 27
INSTALL SETTING
    Menu 28
Installation examples 13
  notes 34
  unsuitable conditions .. 34
  unsuitable installation 34

L

Lamp replacement 29
LANGUAGE 27
  selecting the menu
    language 17
Location and function of
    controls
  connector panel 11
  control panel 10
  front/side/bottom 8
  rear/left side 8
  Remote Commander .. 11

M

Menu
  clearing the menu
    display 23
  INPUT SETTING
    menu 25
  PICTURE CTRL
    menu 24
  SET SETTING menu . 27
  using the menu 23
MENU BACKGRND 28
MENU COLOR 28
MENU POSITION 28
Message
  caution 33
  warning 33

O

Optional accessories 36

P

PICTURE CTRL menu .. 24
Pin assignment 37
Power
  turn on 19
POWER SAVING 8, 27
Precautions 6

R

Remote Commander 11
  battery installation 12
  location and function of
    controls 11
Remote control detector
  front 8
  rear 9
Reset
  resettable items 23
  resetting the item 23
RGB ENHANCER 24

S

SCAN CONV (Scan
    converter) 26
Screen size 13, 35
SET SETTING menu 27
SHARP 24
SHIFT 26
SIZE H 26
Specifications 35
STATUS (on-screen
    display) 27
Supplied accessories 36

T

Troubleshooting 31

V

Ventilation holes
  exhaust 9
  intake 9
VOLUME 25

http://www.world.sony.com/
Printed on recycled paper
Sony Corporation Printed in Japan

SONY

4-083-288-11 (1)

LCD Data Projector

Operating Instructions GB
Mode d'emploi FR
Manual de instrucciones ES

MEMORY STICK™

VPL-CX3

© 2001 Sony Corporation

WARNING

To prevent fire or shock hazard, do not expose the unit to rain or moisture.

To avoid electrical shock, do not open the cabinet. Refer servicing to qualified personnel only.

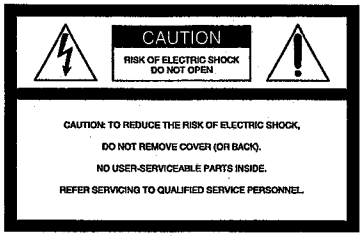

This symbol is intended to alert the user to the presence of uninsulated "dangerous voltage" within the product's enclosure that may be of sufficient magnitude to constitute a risk of electric shock to persons.

This symbol is intended to alert the user to the presence of important operating and maintenance (servicing) instructions in the literature accompanying the appliance.

For the customers in the USA

If you have any questions about this product, you may contact:
Sony Electronics Inc.
Attn: Business Information Center (BIC)
12451 Gateway Boulevard
Ft. Myers, Florida 33913
Telephone No.: 800-686-7669

The number below is for FCC related matters only.

Declaration of Conformity

Trade Name: SONY
Model No.: VPL-CX3
Responsible Party: Sony Electronics Inc.
Address: 680 Kinderkamack Road,
NJ 07649 U.S.A.
Telephone No.: 201-930-6972

This device complies with Part 15 of the FCC Rules. Operation is subject to the following two conditions: (1) This device may not cause harmful interference, and (2) this device must accept any interference received, including interference that may cause undesired operation.

This equipment has been tested and found to comply with the limits for a Class B digital device, pursuant to Part 15 of the FCC Rules. These limits are designed to provide reasonable protection against harmful interference in a residential installation. This equipment generates, uses, and can radiate radio frequency energy and, if not installed and used in accordance with the instructions, may cause harmful interference to radio communications. However, there is no guarantee that interference will not occur in a particular installation. If this equipment does cause harmful interference to radio or television reception, which can be determined by turning the equipment off and on, the user is encouraged to try to correct the interference by one or more of the following measures:

- Reorient or relocate the receiving antenna.
- Increase the separation between the equipment and receiver.
- Connect the equipment into an outlet on a circuit different from that to which the receiver is connected.
- Consult the dealer or an experienced radio/TV technician for help.

You are cautioned that any changes or modifications not expressly approved in this manual could void your authority to operate this equipment.

For the customers in Canada

This Class B digital apparatus complies with Canadian ICES-003.

Voor de klanten in Nederland

Bij dit product zijn batterijen geleverd. Wanneer deze leeg zijn, moet u ze niet weggooien maar inleveren als KCA.

The socket-outlet should be installed near the equipment and be easily accessible.

Memory Stick and are trademarks of Sony Corporation.

Table of Contents

Overview

Precautions 6
Features 7
Location and Function of Controls ... 8
- Front/Side/Bottom 8
- Rear/Left Side 8
- Control Panel 10
- Connector Panel 11
- Remote Commander 12

Setting Up and Projecting

Installing the Projector 14
Connecting the Projector 15
- Connecting with a Computer 15
- Connecting with a VCR or 15k RGB/Component Equipment 17

Selecting the Menu Language 19
Projecting 21
- Effective Tools for Your Presentation 24

Adjustments and Settings Using the Menu

Using the MENU 25
The PICTURE CTRL Menu 26
The INPUT SETTING Menu 27
The SET SETTING Menu 29
The INSTALL SETTING Menu 30

Maintenance

Maintenance 31
- Replacing the Lamp 31
- Cleaning the Air Filter 32

Troubleshooting 33
- Warning Messages 35
- Caution Messages 35

Other

Notes on Installation 36
- Unsuitable Installation 36
- Unsuitable Conditions 36

Specifications 37
Index 42

Please read the attached "Operating Instructions for **Memory Stick**" for using the **Memory Stick**.

GB

Precautions

On safety

- Check that the operating voltage of your unit is identical with the voltage of your local power supply.
- Should any liquid or solid object fall into the cabinet, unplug the unit and have it checked by qualified personnel before operating it further.
- Unplug the unit from the wall outlet if it is not to be used for several days.
- To disconnect the cord, pull it out by the plug. Never pull the cord itself.
- The wall outlet should be near the unit and easily accessible.
- The unit is not disconnected to the AC power source (mains) as long as it is connected to the wall outlet, even if the unit itself has been turned off.
- Do not look into the lens while the lamp is on.
- Do not place your hand or objects near the ventilation holes. The air coming out is hot.
- Be careful not to catch your fingers by the adjuster when you adjust the height of the projector. Do not push hard on the top of the projector with the adjuster out.

On illumination

- To obtain the best picture, the front of the screen should not be exposed to direct lighting or sunlight.
- Ceiling-mounted spot lighting is recommended. Use a cover over fluorescent lamps to avoid lowering the contrast ratio.
- Cover any windows that face the screen with opaque draperies.
- It is desirable to install the projector in a room where floor and walls are not of light-reflecting material. If the floor and walls are of reflecting material, it is recommended that the carpet and wall paper be changed to a dark color.

On preventing internal heat build-up

After you turn off the power with the I / ⏻ key, do not disconnect the unit from the wall outlet while the cooling fan is still running.

Caution

The projector is equipped with ventilation holes (intake) and ventilation holes (exhaust). Do not block or place anything near these holes, or internal heat build-up may occur, causing picture degradation or damage to the projector.

On cleaning

- To keep the cabinet looking new, periodically clean it with a soft cloth. Stubborn stains may be removed with a cloth lightly dampened with a mild detergent solution. Never use strong solvents, such as thinner, benzene, or abrasive cleansers, since these will damage the cabinet.
- Avoid touching the lens. To remove dust on the lens, use a soft dry cloth. Do not use a damp cloth, detergent solution, or thinner.
- Clean the filter at regular intervals.

On repacking

- Save the original shipping carton and packing material; they will come in handy if you ever have to ship your unit. For maximum protection, repack your unit as it was originally packed at the factory.

On LCD projector

- The LCD projector is manufactured using high-precision technology. You may, however, see tiny black points and/or bright points (red, blue, or green) that continuously appear on the LCD projector. This is a normal result of the manufacturing process and does not indicate a malfunction.

Features

High portability

- **Light weight/small size/simple design**
  This projector has been miniaturized to approx. 2.5 kg (5 lb 8 oz) in weight and B5-file size.
  When the front cover equipped with the control functions is closed, the design of the projector is very simple.
  You can carry it easily with your computer.

Quiet operation

Because the projector uses Sony's unique cooling mechanism, it operates quietly.

High brightness, high picture quality

- **High brightness**
  Adopting the high-efficiency optical system and the 120 W UHP lamp allows high brightness (light output 900 ANSI lumen) and excellent uniformity on the picture.
- **High resolution**
  Three 0.7-inch, about 790,000 pixel, XGA panels provide a resolution of 1024 × 768 dots for RGB input and 750 horizontal TV lines for video input.

Easy presentation

- **Simple setup with external equipment**
  This projector is preset for 37 kinds of input signals. You can project images from an external signal source just by connecting the equipment with the supplied cable and pushing the APA key.
- **Compatible with USB (Universal Serial Bus) hub function**
  You can connect USB equipment (e.g., USB mouse) to the projector and use the supplied Remote Commander as the wireless mouse by connecting to the computer with the USB cable. You can also control the projector by using the application software (CD-ROM) supplied with the projector from a computer operated with Windows 98, Windows 98 SE, Windows ME or Windows 2000. Using this application software, you can open a file you want to use for your presentation with the supplied Remote Commander.
  You can communicate data between the **Memory Stick** attached to the projector and the computer.
- **Memory Stick slot**
  Because the projector is supplied with the **Memory Stick** slot, you can make the presentation easily without the computer by using the file saved by the supplied application software, in the **Memory Stick**.
- **Easy-to-use Remote Commander**
  The Remote Commander is equipped with various convenient keys, including the D ZOOM key for zooming in on the image, the FREEZE key for keeping the image projected even if the equipment is disconnected, the D KEYSTONE key for correcting trapezoidal distortion of the picture, and MS SLIDE key for starting the slide show by using the presentation material saved in the **Memory Stick**.

Accepts various input signals

- **Scan converter loaded**
  This projector has a build-in scan converter that converts the input signal within 1024 × 768 dots.
- **Compatible input signals**
  This projector accepts video signals of composite, S video, and component as well as VGA, SVGA, XGA, and SXGA signals, which all can be displayed.
- **Compatible with six color systems**
  NTSC, PAL, SECAM, NTSC4.43[1], PAL-M, or PAL-N color system can be selected automatically or manually.

1) NTSC4.43 is the color system used when playing back a video recorded on NTSC on a NTSC4.43 system VCR.

- Windows is a registered trademark of Microsoft Corporation in the United States and/or other countries.
- VGA, SVGA, XGA and SXGA are registered trademarks of the International Business Machines Corporation, U.S.A.
- Macintosh is a registered trademark of Apple Computer, Inc.
- IBM PC/AT is a registered trademark of International Business Machines Corporation, U.S.A.
- VESA is a registered trademark of Video Electronics Standard Association.
- Display Data Channel is a trademark of Video Electronics Standard Association.
- PC-98 is a trademark of NEC Corporation.

Location and Function of Controls

Front/Side/Bottom

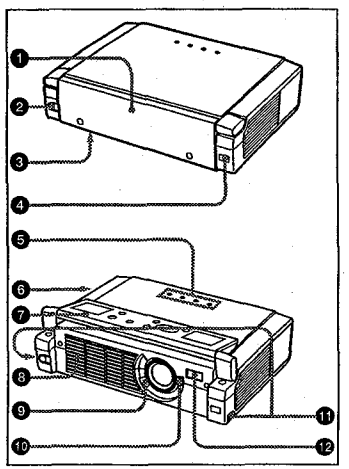

Rear/Left Side

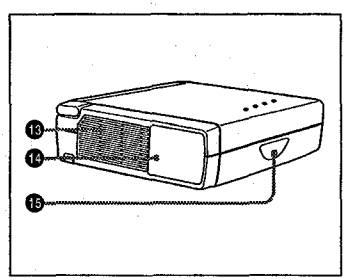

❶ Front cover
Press the OPEN button to open the front cover.

❷ OPEN button

❸ Lamp cover (bottom)

❹ Front remote control detector (SIRCS receiver)

❺ Indicators
- **LAMP/COVER:** Lights up or flashes under the following conditions:
  - Lights up when the lamp has reached the end of its life or becomes a high temperature.
  - Flashes when the lamp cover or air filter cover is not secured firmly.
- **TEMP (Temperature)/FAN:** Lights up or flashes under the following conditions:
  - Lights up when temperature inside the projector becomes unusually high.
  - Flashes when the fan is broken.
- **POWER SAVING:** Lights up when the projector is in power saving mode. When POWER SAVING in the SET SETTING menu is set to ON, the projector goes into power saving mode if no signal is input for 10 minutes. Although the lamp goes out, the cooling fan keeps running. In power saving mode, any key does not function for the first 60 seconds. The power saving mode is canceled when a signal is input or any key is pressed.
- **ON/STANDBY:** Lights up or flashes under the following conditions:
  - Lights in red when a AC power cord is plugged into a wall outlet. Once in standby mode, you can turn on the projector with the I / ⏻ key.
  - Lights in green when the power is turned on.
  - Flashes in green while the cooling fan runs after the power is turned off with the I / ⏻ key. The fan runs for about 90 seconds after the power is turned off. The ON/STANDBY indicator flashes quickly for the first 60 seconds. During this time, you cannot light up the ON/STANDBY indicator with the I / ⏻ key.

For details on the LAMP/COVER and the TEMP/FAN indicators, see on pages 34, 35.

❻ Security lock (right side)
Connects to an optional security cable (Kensington's).

> The security lock corresponds to Kensington's MicroSaver Security System.
> If you have any comment, contact:
> Kensington
> 2853 Campus Drive
> San Mates, CA 94403
> U.S.A.
> Tel: 800-535-4242: extension 3348
>
> Home page address:
> http://www.kensington.com/

❼ Control panel
For details, see "Control Panel" on page 10.

❽ Ventilation holes (exhaust)

❾ Focus lever
Adjusts the picture focus.

❿ Zoom lever
Adjusts the picture size.

⓫ Adjuster adjustment buttons
For details,see "How to use the adjuster" on page 10.

⓬ AC IN socket
Connects the supplied AC power cord.

⓭ Ventilation holes (intake)/air filter cover

Notes
- Do not place anything near the ventilation holes as it may cause internal heat build-up.
- Do not place your hand or objects near the ventilation holes as it may cause the air coming out heat build-up.
- To maintain optimal performance, **clean the air filter every 300 hours.**

⓮ Connector panel
For details, see "Connector Panel" on page 11.

⓯ Rear remote control detector (SIRCS receiver)

How to open/close the front cover

To open the front cover
Press the OPEN button.
The front cover is opened and set on the top panel of the projector.

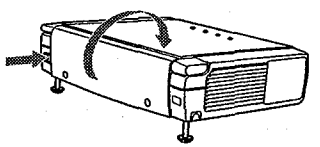

To close the front cover
Restore the front cover by hand.

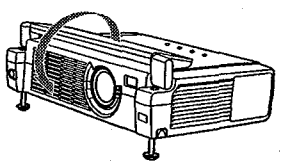

Note
Do not tilt the projector out of the range of the adjuster setting when you open the front cover. If the projector is tilted too much, the front cover opens speedily or slowly.

How to use the adjuster

To adjust the height

Adjust the height of the projector as follows:

1 Lift the projector and press the adjuster adjustment buttons.
The adjusters will extend from the projector.

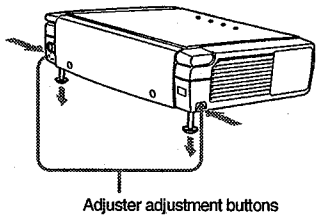

Adjuster adjustment buttons

2 While pressing the buttons, lower the projector. Then, release the buttons. For fine adjustment, turn the adjusters to the right and the left

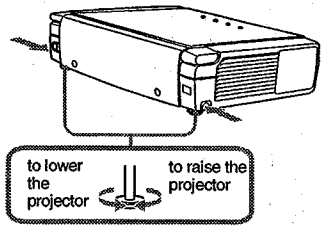

Notes

- Be careful not to let the projector down on your fingers.
- Do not push hard on the top of the projector with the adjusters out. It may be occurred malfunction.

Control Panel

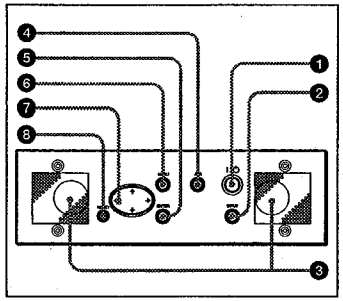

❶ I / ⏻ (on/standby) key

Turns on and off the projector when the projector is in standby mode. The ON/STANDBY indicator lights in green when the power is turned on.
When turning off the power, press the I / ⏻ key twice following the message on the screen, or press and hold the key for about one second.

For details on steps for turning off the power, see "To turn off the power" on page 23.

❷ INPUT key

Selects the input signal. Each time you press the key, the input signal switches as follows:

INPUT A → MS → VIDEO → S VIDEO

❸ Speakers

❹ APA (Auto Pixel Alignment) key

Adjusts a picture clearest automatically while a signal is input from a computer.

❺ ENTER key

Enters the settings of items in the menu system.

❻ MENU key

Displays the on-screen menu. Press again to clear the menu.

❼ Arrow keys (↑/↓/←/→)

Select the menu or to make various adjustments.

❽ RESET key

Resets the value of an item back to its factory preset value. This key functions when the menu or a setting item is displayed on the screen.

Connector Panel

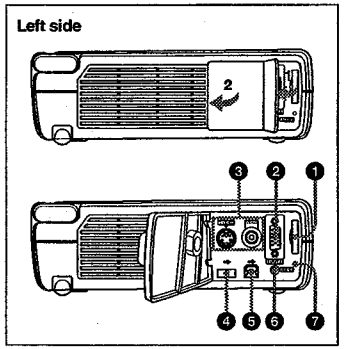

❶ Memory Stick slot

The **Memory Stick** can be attached. Never insert an object other than the **Memory Stick**.

*For details, see the attached "Operating Instructions for **Memory Stick**".*

❷ INPUT A connector (HD D-sub 15-pin, female)

Connect to external equipment such as a computer.
Connects to the monitor output on a computer using the supplied cable.
When inputting a component or 15k RGB signal, use an optional cable.

❸ Video input connector

Connect to external video equipment such as a VCR.

- **VIDEO (phono type):** Connects to the composite video output of video equipment.
- **S VIDEO (mini DIN 4-pin):** Connects to the S video output (Y/C video output) of video equipment.

❹ USB connector (USB A-plug for downstream, 4-pin)

Connect USB equipment such as a mouse, camera, etc.

❺ USB connector (USB B-plug for upstream, 4-pin)

Connect to the USB connector on a computer. When you connect the projector to the computer, you can control the mouse function with the supplied Remote Commander. The supplied application software can be installed in the computer attached to this connector.

❻ AUDIO (stereo minijack) connector

When listening to sound output from the computer, connect to the audio output of the computer.
When listening to sound output from the VCR, connect to the audio output of the VCR.

❼ Access lamp

Lights during having access to the **Memory Stick**.
Do not remove the **Memory Stick** while the access lamp is lit.

Remote Commander

The keys that have the same names as those on the control panel function identically. You can control a connected computer using the Remote Commander.

For details, see "To control the computer using the supplied Remote Commander" on page 22.

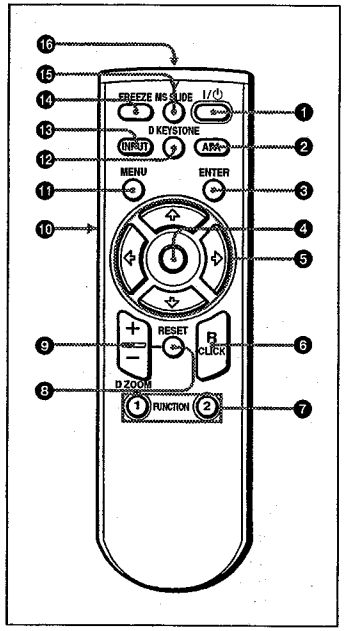

❶ I / ⏻ key

❷ APA (Auto Pixel Alignment) key

❸ ENTER key

❹ Joystick
Functions as the mouse of the computer connected to the unit.

❺ Arrow keys (↑/↓/←/→)

❻ R CLICK key
Functions as the right button on a mouse.

❼ FUNCTION 1, 2 keys
These keys function when the supplied application software is used.
When you connect the projector with a computer, you can open a file on the screen by just pressing the FUNCTION key. This will enhance your presentation. To use this function, allocate a file to the FUNCTION key by using the application software.

For details, see the README file and the HELP file supplied with the application software.

❽ RESET key
Resets the value of an item back to its factory preset value or returns the enlarged image back to its original size.

❾ D ZOOM +/– key
Enlarges the image at a desired location on the screen.
+: Pressing the + key once displays the icon. This icon indicates the point you want to enlarge. Use an arrow key (↑/↓/←/→) to move the icon to the point to be enlarged. Press the + key repeatedly until the image is enlarged to your requirements.
–: Pressing the – key reduces an image that has been enlarged with the D ZOOM + key.

❿ L CLICK key
Functions as the left button on a mouse.

⓫ MENU key

⓬ D KEYSTONE key
Adjusts trapezoidal distortion of the picture that may occur depending on the projector angle. Use an arrow key (↑/↓/←/→) to square the image.

⓭ INPUT key

⓮ FREEZE key
Used to freeze the picture projected. To cancel the frozen picture, press the key again.

⓯ MS SLIDE key
Used to execute the slide show. The input signal switches to MS and the slide show begins.

⓰ Infrared transmitter

To install batteries

1 Push and slide to open the lid, then install the two size AA (R6) batteries (supplied) with the correct polarity.

While pressing the lid, slide it.

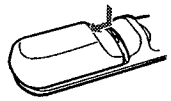

Be sure to install the battery from the ⊖ side.

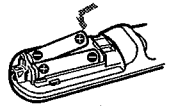

2 Replace the lid.

Notes on batteries

- Make sure that the battery orientation is correct when inserting batteries.
- Do not mix an old battery with a new one or different types of batteries.
- If you do not use the Remote Commander for a long time, remove the batteries to avoid damage from battery leakage. If batteries have leaked, remove them, wipe and dry the battery compartment, and replace the batteries with new ones.

Notes on Remote Commander operation

- Make sure that nothing obstructs the infrared beam between the Remote Commander and the remote control detector on the projector. Direct the Remote Commander toward the front or rear remote control detector.
- The operation range is limited. The shorter the distance between the Remote Commander and the projector is, the wider the angle within which the commander can control the projector becomes.

Installing the Projector

This section describes how to install the projector.
The distance between the lens and the screen varies depending on the size of the screen. Use the following table as a guide.

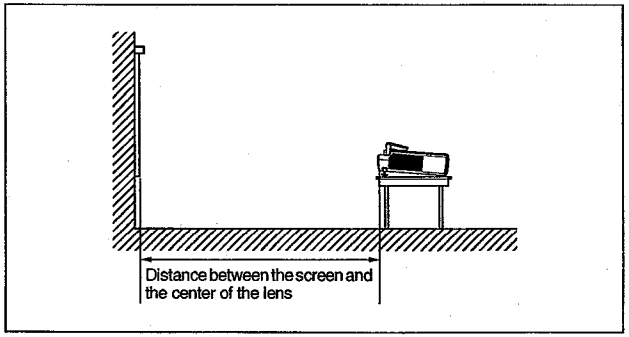

Unit: m (feet)

Screen size (inches)	40	60	80	100	120	150
Minimum Distance	1.6 (5.2)	2.4 (7.9)	3.2 (10.6)	4.1 (13.3)	4.9 (16.0)	6.1 (20.0)
Maximum Distance	1.9 (6.1)	2.8 (9.2)	3.7 (12.2)	4.7 (15.4)	5.6 (18.4)	7.0 (23.1)

Note

You can not install the projector upside down, such as on a ceiling.

Connecting the Projector

When making connections, be sure to do the following:

- Turn off all equipment before making any connections.
- Use the proper cables for each connection.
- Insert the cable plugs properly; plugs that are not fully inserted often generate noise. When pulling out a cable, be sure to pull it out from the plug, not the cable itself.

Connecting with a Computer

This section describes how to connect the projector to a computer.
For more information, refer to the computer's instruction manual.

Notes

- The projector accepts VGA, SVGA, XGA, and SXGA signals. However, we recommend that you set the output mode of your computer to XGA mode for the external monitor.
- If you set your computer, such as a notebook type, to output the signal to both your computer's display and the external monitor, the picture of the external monitor may not appear properly. Set your computer to output the signal to only the external monitor.
  For details, refer to the computer's operating instructions supplied with your computer.
- This projector is compatible with a DDC2B (Digital Data Channel 2B). If your computer is compatible with a DDC, turn the projector on according to the following procedures.

1 Connect the projector to the computer by using the supplied HD D-sub 15 pin cable.
2 Turn the projector on.
3 Start the computer.

To connect an IBM PC/AT compatible computer

When you use a USB mouse and USB equipment

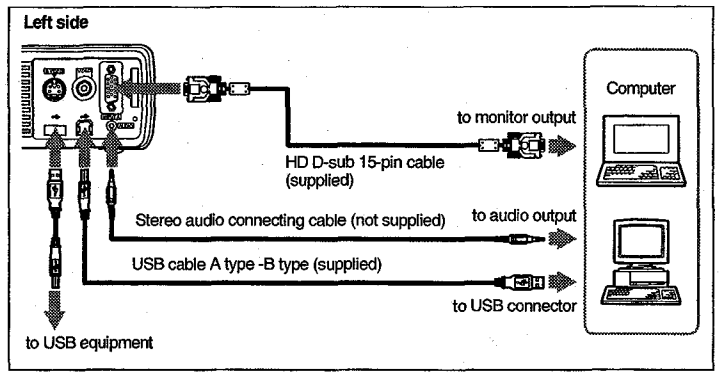

On the USB function

When connecting the projector to a computer by using the USB cable for the first time, the computer recognizes the following devices automatically.

1 USB hub (general use)
2 USB human interface device (wireless mouse function)
3 USB human interface device (projector control function
The computer also recognizes the device connected to the downstream connector on the projector.

Recommended operating environment

When you use the USB function, connect your computer as illustrated above. This application software and the USB function can be used on a computer loaded with Windows 98, Windows 98 SE, Windows ME or Windows 2000 preinstall models.

Notes

- Your computer may not start correctly when connected to the projector via the USB cable. In this case, disconnect the USB cable, restart the computer, then connect the computer to the projector using the USB cable.
- This projector is not guaranteed for suspend, standby mode. When you use the projector in suspend, standby mode, disconnect the projector from the USB port on the computer.
- Operations are not guaranteed for all the recommended computer environments.

To connect a Macintosh computer

Use an ADP-20 signal adapter (not supplied).

Connecting with a VCR or 15k RGB/Component Equipment

This section describes how to connect the projector to a VCR and 15k RGB/component equipment.
For more information, refer to the instruction manuals of the equipment you are connecting.

To connect a VCR

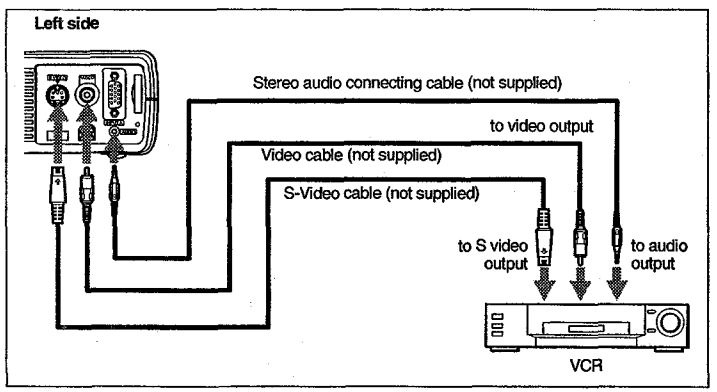

To connect a 15k RGB/Component equipment

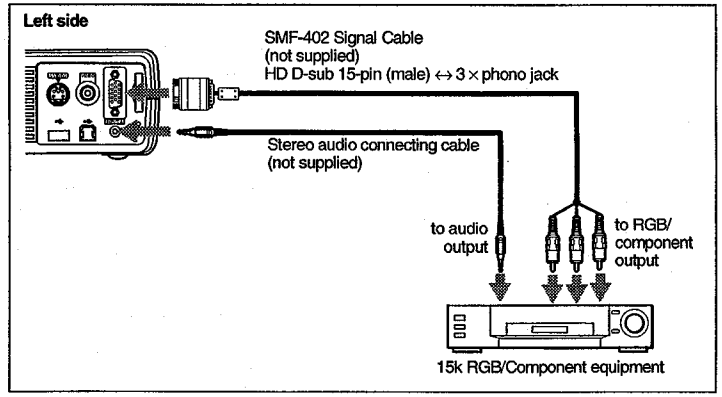

Notes

- Set the aspect ratio using ASPECT in the INPUT SETTING menu according to the input signal.
- When you connect the unit to 15k RGB or component video equipment, select video GBR or component with the INPUT-A setting in the SET SETTING menu.
- Use the composite sync signal when you input the external sync signal from 15k RGB/component equipment.

Selecting the Menu Language

You can select one of seven languages for displaying the menu and other on-screen displays. The factory setting is English.

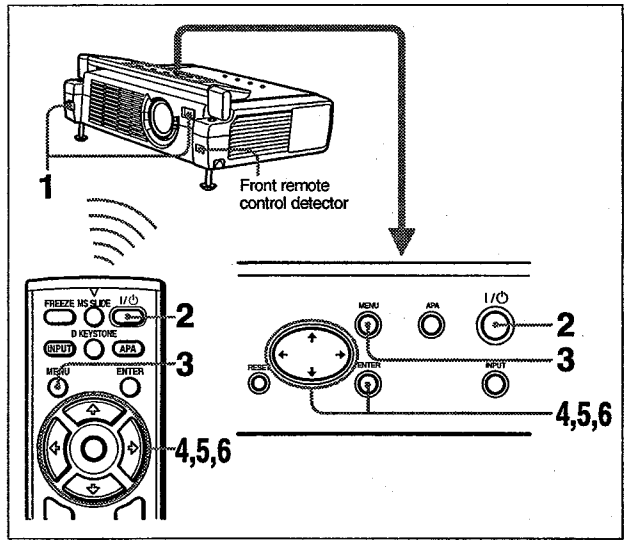

1 Open the front cover, then plug the AC power cord into a wall outlet.

2 Press the I / ⏻ key to turn on the projector.

3 Press the MENU key.
The menu appears.
The menu presently selected is shown as a yellow button.

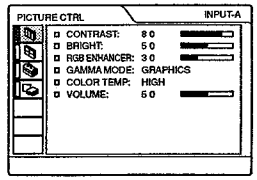

4 Press the ↑ or ↓ key to select the SET SETTING menu, then press the → or ENTER key.
The selected menu appears.

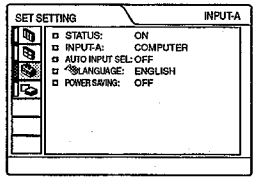

5 Press the ↑ or ↓ key to select "LANGUAGE," then press the → or ENTER key.

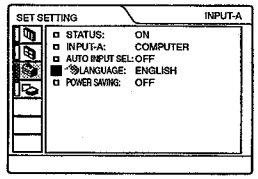

6 Press the ↑ or ↓ key to select a language, then press the ← or ENTER key.
The menu changes to the selected language.

To clear the menu

Press the MENU key.
The menu disappears automatically if a key is not pressed for one minute.

Projecting

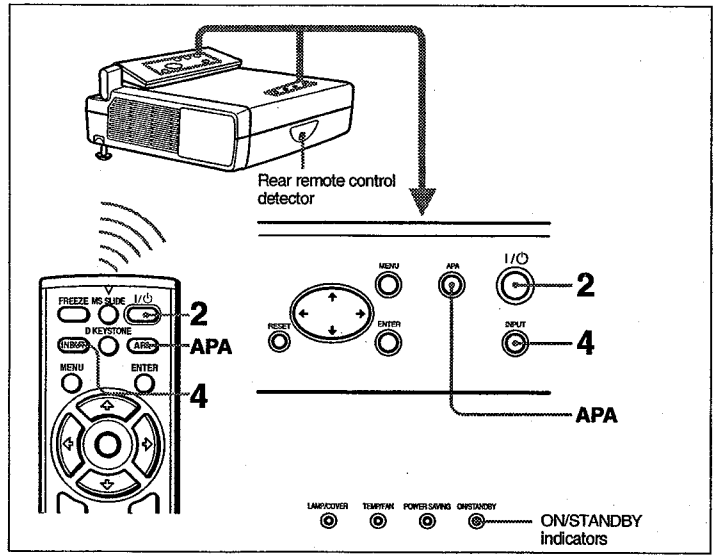

1 Open the front cover, plug the AC power cord into a wall outlet, then connect all equipment.
The ON/STANDBY indicator lights in red and the projector goes into standby mode.

2 Press the I / ⏻ key.
The ON/STANDBY indicator lights in green.

3 Turn on the equipment connected to the projector.

4 Press the INPUT key to select the input source.

To input from	Press INPUT to display
Computer connected to the INPUT A connector	INPUT A
Memory Stick inserted to the **Memoty Stick** slot	MS
Video equipment connected to the VIDEO input connector	VIDEO
Video equipment connected to the S VIDEO input connector	S VIDEO

5 Turn the zoom lever to adjust the size of the picture.

6 Turn the focus lever to adjust the focus.

Caution

Looking into the lens when projecting may cause injury to your eyes.

To adjust the volume

The volume can be adjusted in the on-screen menu. See "VOLUME" in the PICTURE CTRL menu on page 27.

To control the computer using the supplied Remote Commander

When you connect an IBM PC/AT compatible to the projector by using the USB cable, you can control the mouse of the computer using the Remote Commander.
The R/L CLICK keys and joystick function as follows.

Key and joystick	Function
R CLICK (front)	Right button
L CLICK (rear)	Left button
Joystick	Corresponds with the movements of the mouse

Note

Make sure that nothing obstructs the infrared beam between the Remote Commander and the remoter control detector on the projector.

To get the clearest picture

You can adjust picture quality when projecting a signal from the computer.

1 Project a still picture from the computer.

2 Press the APA key.
"Complete!" appears on the screen when the picture is adjusted properly.

Notes

- Press the APA key when the full image is displayed on the screen. If there are black edges around the image, the APA function will not function properly and the image may extend beyond the screen.
- When you switch the input signal or re-connect a computer, press the APA key again to adjust the picture again.
- You can cancel the adjustment by pressing the APA key again while "ADJUSTING" appears on the screen.
- The picture may not be adjusted properly depending on the kinds of input signals.
- Adjust the items in the INPUT SETTING menu when you adjust the picture manually.

To turn off the power

1 Press the I / ⏻ key.
"POWER OFF? Please press I / ⏻ key again." appears to confirm that you want to turn off the power.

Note

A message disappears if you press any key except the I / ⏻ key, or if you do not press any key for five seconds.

2 Press the I / ⏻ key again.
The ON/STANDBY indicator flashes in green and the fan continues to run for about 90 seconds to reduce the internal heat. Also, the ON/STANDBY indicator flashes quickly for the first 60 seconds. During this time, you will not be able to light up the ON/STANDBY indicator with the I / ⏻ key.

3 Unplug the AC power cord from the wall outlet after the fan stops running and the ON/STANDBY indicator lights in red.

When you cannot confirm the on-screen message

When you cannot confirm the on-screen message in a certain condition, you can turn off the power by holding the I / ⏻ key for about one second.

Note

Do not unplug the AC power cord while the fan is still running; otherwise, the fan will stop even though the internal heat is still high, which could result in a breakdown of the projector.

On air filter

To maintain optimal performance, **clean the air filter every 300 hours.**

Effective Tools for Your Presentation

To enlarge the image (Digital Zoom function)

You can select a point in the image to enlarge. This function works when a signal from a computer is input and the picture saved in the **Memory Stick** is projected.

1 Press the D ZOOM + key on the Remote Commander.
The digital zoom icon appears the center of the image.

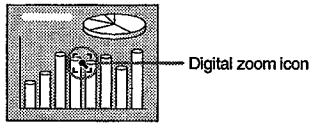

2 Move the icon to the point on the image you want to enlarge. Use the arrow key (↑/↓/←/→) to move the icon.

3 Press the D ZOOM + key again.
The image where the icon is located is enlarged. The enlargement ratio is displayed on the screen for a few seconds.
By pressing the + key repeatedly, the image size increases (ratio of enlargement: max. 4 times.)

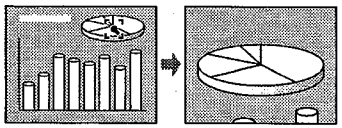

Use the arrow key (↑/↓/←/→) to scroll the enlarged image.

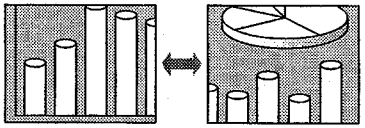

To return the image back to its original size

Press the D ZOOM – key.
Just pressing the RESET key returns the image back to its original size immediately.

To freeze the image projected (Freeze function)

Press the FREEZE key. "FREEZE" appears when the key is pressed. This function works when a signal from a computer is input and the picture saved in the **Memory Stick** is projected.
To restore the original screen, press the FREEZE key again.

Using the MENU

The projector is equipped with an on-screen menu for making various adjustments and settings. You can change the menu language displayed in the on-screen menu.

To change the menu language, see "Selecting the Menu Language" on page 19.

1 Press the MENU key.
The menu appears.
The menu presently selected is shown as a yellow button.

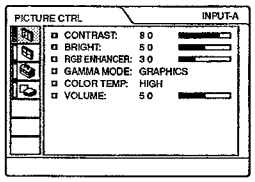

2 Use the ↑ or ↓ key to select a menu, then press the → or ENTER key.
The selected menu appears.

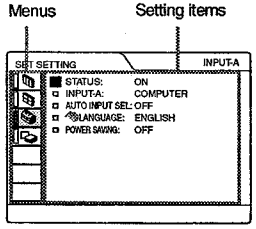

3 Select an item.
Use the ↑ or ↓ key to select the item, then press the → or ENTER key.

4 Make the setting or adjustment on an item.

- When changing the adjustment level:
  To increase the number, press the ↑ or → key.
  To decrease the number, press the ↓ or ← key.
  Press the ENTER key to restore the original screen.
- When changing the setting:
  Press the ↑ or ↓ key to change the setting.
  Press the ENTER or ← key to restore the original screen.

To clear the menu

Press the MENU key.
The menu disappears automatically if a key is not pressed for one minute.

To reset items that have been adjusted

Press the RESET key.
"Complete!" appears on the screen and the settings appearing on the screen are reset to their factory preset values.
Items that can be reset are:

- "CONTRAST," "BRIGHT," "COLOR," "HUE," "SHARP", and "RGB ENHANCER" in the PICTURE CTRL menu
- "DOT PHASE," "SIZE H," and "SHIFT" in the INPUT SETTING menu
- "DIGIT KEYSTONE" in the INSTALL SETTING menu.

About the memory of the settings

The settings are automatically stored in the projector memory.

If no signal is input

If there is no input signal, "NO INPUT– Cannot adjust this item." appears on the screen.

About the menu display

You can set the display position of the menu, intensity of the background picture and tone of the menu items as you like.

For details, see page 30.

The PICTURE CTRL Menu

The PICTURE CTRL (control) menu is used for adjusting the picture.
Items that cannot be adjusted depending on the input signal are not displayed in the menu.

For details on the unadjustable items, see page 39.

When the video signal is input

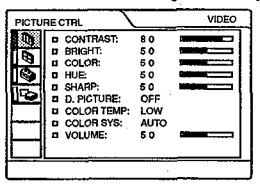

When the RGB signal is input

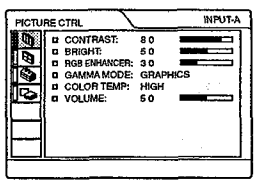

Menu Items

CONTRAST

Adjusts the picture contrast. The higher the setting, the greater the contrast. The lower the setting, the lower the contrast.

BRIGHT

Adjusts the picture brightness. The higher the setting, the brighter the picture. The lower the setting, the darker the picture.

COLOR

Adjusts color intensity. The higher the setting, the greater the intensity. The lower the setting, the lower the intensity.

HUE

Adjusts color tones. The higher the setting, the picture becomes greenish. The lower the setting, the picture becomes purplish.

SHARP

Adjusts the picture sharpness. The higher the setting, the sharper the picture. The lower the setting, the softer the picture.

RGB ENHANCER

Adjusts the picture sharpness when RGB signals are input.
The higher the setting, the sharper the picture. The lower the setting, the softer the picture.

D. (Dynamic) PICTURE

Emphasizes the black color.

ON: Emphasizes the black color to produce a bolder "dynamic" picture.

OFF: Reproduces the dark portions of the picture accurately, in accordance with the source signal.

GAMMA MODE

Selects a gamma correction curve.

GRAPHICS: Improves the reproduction of halftones. Photos can be reproduced in natural tones.

TEXT: Contrasts black and white. Suitable for images that contain lots of text.

COLOR TEMP

Adjusts the color temperature.

HIGH: Makes the white color bluish.

LOW: Makes the white color reddish.

COLOR SYS (System)

Selects the color system of the input signal.
- **AUTO:** NTSC3.58, PAL, SECAM and NTSC4.43 (switched automatically)
- **PAL-M/N:** PAL-M/PAL-N and NTSC3.58 (switched automatically)

Normally, set to AUTO. If the picture is distorted or colorless, select the color system according to the input signal.

VOLUME

Adjusts the volume. The volume can be adjusted for each of INPUT A, MS, VIDEO and S VIDEO input.

The INPUT SETTING Menu

The INPUT SETTING menu is used to adjust the input signal.
Items that cannot be adjusted depending on the input signal are not displayed in the menu.

For details on the unadjustable items, see page 39.

When the video signal is input

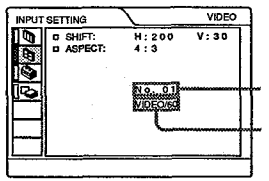

When the RGB signal is input

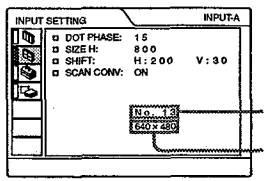

MENU Items

DOT PHASE

Adjusts the dot phase of the LCD panel and the signal input from the INPUT A connector.
Adjust the picture further for finer picture after the picture is adjusted by pressing the APA key.
Adjust the picture to where it looks clearest.

SIZE H

Adjusts the horizontal size of picture input from the INPUT A connector. The higher the setting, the larger the horizontal size of the picture. The lower the setting, the smaller the horizontal size of the picture. Adjust the setting according to the dots of the input signal.

For details on the suitable value for the preset signals, see page 40.

SHIFT

Adjusts the position of the picture. H adjusts the horizontal position of the picture.V adjusts the vertical position of the picture. As the setting for H increases, the picture moves to the right, and as the setting decreases, the picture moves to the left. As the setting for V increases, the picture moves up, and as the setting decreases, the picture moves down. Use the ← or the → key to adjust the horizontal position and the ↑ and ↓ key for the vertical position.

SCAN CONV (Scan converter)

Converts the signal to display the picture according to the screen size.

ON: Displays the picture according to the screen size. The picture will lose some clarity.

OFF: Displays the picture while matching one pixel of input picture element to that of the LCD. The picture will be clear but the picture size will be smaller.

Note

When XGA or SXGA signal is input, this item will not be displayed.

ASPECT

Sets the aspect ratio of the picture. When inputting 16:9 (squeezed) signal from equipment such as a DVD player, set to 16:9.

4:3: When the picture with ratio 4:3 is input.

16:9: When the picture with ratio 16:9 (squeezed) is input.

About the Preset Memory No.

This projector has 37 types of preset data for input signals (the preset memory). When a preset signal is input, the projector automatically detects the signal type and recalls the data for the signal from the preset memory to adjust it to an optimum picture. The memory number and signal type of that signal are displayed in the INPUT SETTING menu. You can also adjust the preset data through the INPUT SETTING menu.

This projector has 20 types of user memories for INPUT-A into which you can save the setting of the adjusted data for an unpreset input signal.

When an unpreset signal is input for the first time, a memory number is displayed as 0. When you adjust the data of the signal in the INPUT SETTING menu, it will be registered to the projector. If more than 20 user memories are registered, the newest memory always overwrites the oldest one.

See the chart on page 40 to find if the signal is registered to the preset memory.

Since the data is recalled from the preset memory about the following signals, you can use these preset data by adjusting SIZE H. Make fine adjustment by adjusting SHIFT.

Signal	Memory No.	SIZE
Super Mac-2	23	1312
SGI-1	23	1320
Macintosh 19"	25	1328
Macintosh 21"	27	1456
Sony News	36	1708
PC-9821 1280 × 1024	36	1600
WS Sunmicro	37	1664

Note

When the aspect ratio of input signal is other than 4:3, a part of the screen is displayed in black.

The SET SETTING Menu

The SET SETTING menu is used for changing the settings of the projector.

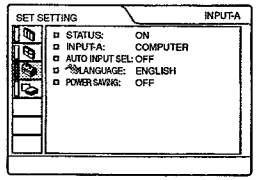

Menu Items

STATUS (on-screen display)

Sets up the on-screen display.

ON: Shows all of the on-screen displays.

OFF: Turns off the on-screen displays except for the menus, a message when turning off the power, and warning messages.

INPUT-A

Selects the computer, component or video GBR signal input from the INPUT A connector.

Note

If the setting is not correct, "Please check INPUT-A setting." appears on the screen and the color of the picture becomes strange or the picture is not displayed.

AUTO INPUT SEL

When set to ON, the projector detects input signals in the following order: INPUT-A/ MS/VIDEO/S-VIDEO. It indicates the input channel when the power is turned on or the INPUT key is pressed.

LANGUAGE

Selects the language used in the menu and on-screen displays. Available languages are: English, French, German, Italian, Spanish, Japanese and Chinese.

POWER SAVING

When set to ON, the projector goes into power saving mode if no signal is input for 10 minutes.

The INSTALL SETTING Menu

The INSTALL SETTING menu is used for changing the settings of the projector.

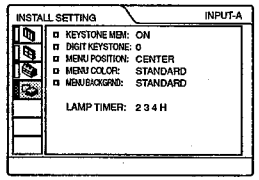

Menu Items

KEYSTONE MEM

ON: DIGIT KEYSTONE setting is stored. The data is retrieved when the projector power is turned on. The setting will remain the same every time.
OFF: DIGIT KEYSTONE is reset to 0 when the power is turned on next time.

DIGIT KEYSTONE

Corrects the trapezoidal distortion caused by the projection angle.

When the upside of the trapezoid is longer than the downside ▽ **:** Sets to a plus value.

MENU POSITION

Selects the display position of the menu from TOP LEFT, BOTTOM LEFT, CENTER, TOP RIGHT and BOTTOM RIGHT.

MENU COLOR

Selects the tone of the menu display from STANDARD, WARM, COOL, GREEN or GRAY.

MENU BACKGRND

Selects the intensity of the background picture of the menu display from DARK, STANDARD or LIGHT.

LAMP TIMER

Indicates how long the lamp has been turned on.

Note

This only displays the time. You cannot alter the display.

Maintenance

Replacing the Lamp

When the lamp has burnt out or dims, or "Please replace the LAMP." appears on the screen, replace the lamp with a new one. Use LMP-C121 Projector Lamp as the replacement lamp. The lamp life varies depending on conditions of use.

When replacing the lamp after using the projector

Turn off the projector, then unplug the power cord.
Wait for at least an hour for the lamp to cool.

Caution

The lamp becomes a high temperature after turning off the projector with the I / ⏻ key. If you touch the lamp, you may scald your finger. When you replace the lamp, wait for at least an hour for the lamp to cool.

1 Place a protective sheet (cloth) beneath the projector. Turn the projector over so you can see its underside.

Note

Be sure that the projector is stable after turning it over.

2 Open the lamp cover by loosening a screw with the Phillips screwdriver (supplied with the Projector Lamp).

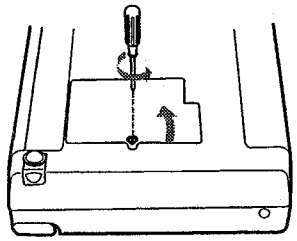

Note

For safety sake, do not loosen any other screws.

3 Loosen the screws on the lamp unit with the Phillips screwdriver. Pull out the lamp unit by the handle.

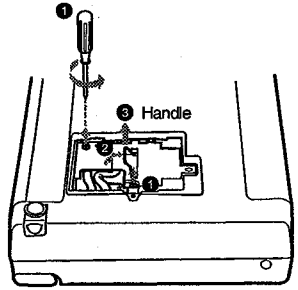

4 Insert the new lamp all the way in until it is securely in place. Tighten the screws. Fold up the handle.

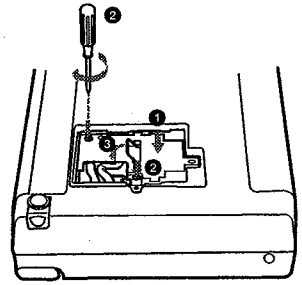

Notes

- Be careful not to touch the glass surface of the lamp.
- The power will not turn on if the lamp is not secured properly.

5 Close the lamp cover and tighten the screws.

6 Turn the projector back over.

7 Connect the power cord and turn the projector to standby mode.

8 Press the following keys on the control panel in the following order for less than five seconds each: RESET, ←, →, ENTER.

Notes

- Be sure to use the LMP-C121 Projector Lamp for replacement. If you use lamps other than LMP-C121, the projector may cause a malfunction.
- Be sure to turn off the projector and unplug the power cord before replacing the lamp.
- Do not put your hands into the lamp replacement spot, or not fall any liquid or object into it to avoid electrical shock or fire.

Cleaning the Air Filter

The air filter should be cleaned every 300 hours.
Remove dust from the outside of the ventilation holes with a vacuum cleaner.

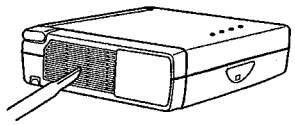

When it becomes difficult to remove the dust from the filter with a vacuum cleaner, remove the air filter and wash it.

1 Turn off the power and unplug the power cord.

2 Remove the air filter cover.

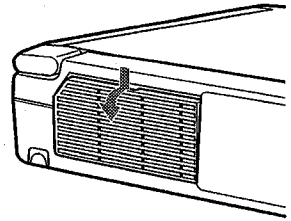

3 Remove the air filter.

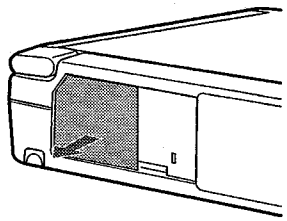

4 Wash the air filter with a mild detergent solution and dry it in a shaded place.

5 Attach the air filter and replace the cover.

Notes

- If the dust cannot be removed from the air filter, replace the air filter with the supplied new one.
- Be sure to attach the air filter cover firmly; the power will not be turned on if it is not closed securely.
- The air filter has a face and a reverse side. Place the air filter so that it fits in a notch on the air filter cover.

Troubleshooting

If the projector appears to be operating erratically, try to diagnose and correct the problem using the following instructions. If the problem persists, consult with qualified Sony personnel.

Power

Symptom	Cause and Remedy
The power is not turned on.	• The power has been turned off and on with the I / ⏻ key at a short interval. → Wait for about 90 seconds before turning on the power (see page 23). • The lamp cover is detached. → Close the lamp cover securely (see page 31). • The air filter cover is detached. → Close the air filter cover securely (see page 32).
Both the LAMP/COVER and TEMP/FAN indicators light up.	• The electrical system breaks down. → Consult with qualified Sony personnel.

Picture

Symptom	Cause and Remedy
No picture.	• Cable is disconnected or the connections are wrong. → Check that the proper connections have been made (see page 15). • Input selection is incorrect. → Select the input source correctly using the INPUT key (see page 21). • The computer signal is not set to output to an external monitor. → Set the computer signal to output to an external monitor (see page 15). • The computer signal is set to output to both the LCD of the computer and external monitor. → Set the computer signal to output only to the external monitor (see page 15).
The picture is noisy.	• Noise may appear on the background depending on the combination of the numbers of dot input from the connector and numbers of pixel on the LCD panel. → Change the desktop pattern on the connected computer.
The picture from INPUT A connector is colored strange.	• Setting for INPUT-A in the SET SETTING menu is incorrect. → Select COMPUTER, VIDEO GBR or COMPONENT for INPUT-A in the SET SETTING menu according to the input signal (see page 29).
"Please check INPUT-A setting." appears in spite of inputting the correct signal from INPUT A.	• Setting for INPUT-A in the SET SETTING menu is incorrect. → Select COMPUTER, VIDEO GBR or COMPONENT for INPUT-A in the SET SETTING menu according to the input signal (see page 29).
On-screen display does not appear.	• STATUS in the SET SETTING menu has been set to OFF. → Set STATUS in the SET SETTING menu to ON (see page 29).

Symptom	Cause and Remedy
Color balance is incorrect.	• Picture has not been adjusted properly. → Adjust the picture (see page 26). • Projector is set to wrong color system. → Set COLOR SYS in the PICTURE CTRL menu to match the color system being input (see page 27).
The picture is too dark.	• Contrast or brightness has not been adjusted properly. → Adjust the contrast or brightness in the PICTURE CTRL menu properly (see page 26).
The picture is not clear.	• Picture is out of focus. → Adjust the focus (see page 22). • Condensation has occurred on the lens. → Leave the projector for about two hours with the power on.
The picture appears too small on the screen.	• SHIFT in the INPUT SETTING menu has not been adjusted properly. → Adjust SHIFT in the INPUT SETTING menu properly (see page 28).
The picture flickers.	• DOT PHASE in the INPUT SETTING menu has not been adjusted properly. → Adjust DOT PHASE in the INPUT SETTING menu properly (see page 27).

Sound

Symptom	Cause and Remedy
No sound.	• Cable is disconnected or the connections are wrong. → Check that the proper connections have been made (see page 15).
When sound is input through AUDIO connector, sound comes through one channel only.	• Monaural sound is being input through the AUDIO connector. → Input stereo sound.

Remote Commander

Symptom	Cause and Remedy
The Remote Commander does not work.	• The Remote Commander batteries are dead. → Replace with a new battery (see page 12).

Others

Symptom	Cause and Remedy
The LAMP/COVER indicator flashes.	• The lamp cover or the air filter cover is detached. → Attach the cover securely (see page 31).
The LAMP/COVER indicator lights up.	• The lamp has reached the end of its life. → Replace the lamp (see page 31). • The lamp becomes a high temperature. → Wait for 90 seconds to cool down the lamp and turn on the power again (see page 23).

Symptom	Cause and Remedy
The TEMP/FAN indicator flashes.	• The fan is broken. → Consult with qualified Sony personnel.
The TEMP/FAN indicator lights up.	• The internal temperature is unusually high. → Check to see if nothing is blocking the ventilation holes.
Both the LAMP/COVER and TEMP/FAN indicators light up.	• The electrical system breaks down. → Consult with qualified Sony personnel.

Warning Messages

Use the list below to check the meaning of the messages displayed on the screen.

Message	Meaning and Remedy
High temp.! Lamp off in 1 min.	• Internal temperature is too high. → Turn off the power. → Check to see if nothing is blocking the ventilation holes.
Frequency is out of range!	• This input signal cannot be projected as the frequency is out of the acceptable range of the projector. → Input a signal that is within the range of the frequency. • The resolution setting of the output signal of a computer is too high. → Set the setting of output to XGA (see page 15).
Please check INPUT-A setting.	• You have input RGB signal from the computer when INPUT-A in the SET SETTING menu is set to COMPONENT. → Set INPUT-A correctly (see page 29).
Please replace the LAMP.	• It is time to replace the lamp. → Replace the lamp.

Caution Messages

Use the list below to check the meaning of the messages displayed on the screen.

Message	Meaning and Remedy
NO INPUT	• No input signal → Check connections (see page 15).
Not applicable!	• You have pressed the wrong key. → Press the appropriate key.

Notes on Installation

Unsuitable Installation

Do not install the projector in the following situations. These installations may cause malfunction or damage to the projector.

Poorly ventilated

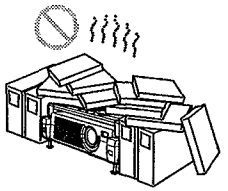

- Allow adequate air circulation to prevent internal heat build-up. Do not place the unit on surfaces (rugs, blankets, etc.) or near materials (curtains, draperies) that may block the ventilation holes. When the internal heat builds up due to the block-up, the temperature sensor will function with the message "High temp.! Lamp off in 1 min." The power will be turned off automatically after one minute.
- Leave space of more than 30 cm (11 7/8 inches) around the unit.
- Be careful that the ventilation holes may inhale tininess such as a piece of paper.

Highly heated and humid

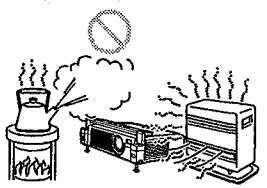

- Avoid installing the unit in a location where the temperature or humidity is very high, or temperature is very low.
- To avoid moisture condensation, do not install the unit in a location where the temperature may rise rapidly.

Very dusty

Avoid installing the unit in a location where there is a lot of dust; otherwise, the air filter will be obstructed. The dust blocking the air through the filter may cause raising the internal heat of the projector. Clean it up periodically.

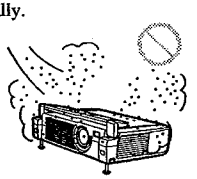

Unsuitable Conditions

Do not use the projector under the following conditions.

Toppling the unit

Avoid using as the unit topples over on its side. It may cause malfunction.

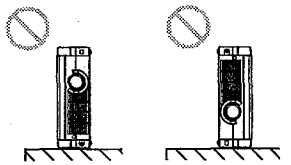

Tilting the unit out of the range of the adjuster setting

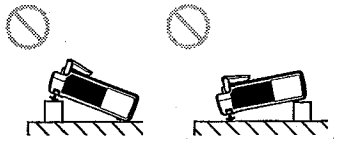

Do not install the unit other than on the floor. Avoid using when the unit is tilted out of the range of the adjuster setting. Such installation may cause malfunction.

Blocking the ventilation holes

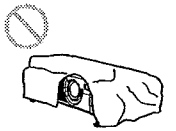

Avoid using something to cover over the ventilation holes (exhaust/intake); otherwise, the internal heat may build up.

Specifications

Optical characteristics

Projection system	3 LCD panels, 1 lens, projection system
LCD panel	0.7-inch TFT LCD panel with micro-lens array, 2,359,296 pixels (786,432 pixels × 3)
Lens	1.3 times zoom lens f 28.4 to 34.0 mm/F 1.8 to 2.2
Lamp	120 W UHP
Projection picture size	Range: 40 to 150 inches (diagonal measure)
Light output	ANSI lumen[1] 900 lm
Throwing distance	When the XGA signal is input 40-inch: 1593 to 1845 mm (62 5/8 to 72 7/8 inches) 60-inch: 2413 to 2789 mm (95 to 109 7/8 inches) 80-inch: 3232 to 3733 mm (127 1/4 to 146 7/8 inches) 100-inch: 4051 to 4677 mm (159 1/2 to 184 3/8 inches) 120-inch: 4870 to 5621 mm (191 7/8 to 221 3/8 inches) 150-inch: 6099 to 7037 mm (240 1/4 to 277 1/4 inches)

1) ANSI lumen is a measuring method of American National Standard IT 7.228.

Electrical characteristics

Color system	NTSC3.58/PAL/SECAM/ NTSC4.43/PAL-M/PAL-N system, switched automatically/ manually
Resolution	750 horizontal TV lines (Video input) 1,024 × 768 dots (RGB input)
Acceptable computer signals	fH: 15 to 92 kHz fV: 48 to 85 Hz
Speaker	Stereo speakers system, 28 mm (1 1/8 inches) diameter, max. 0.5 W × 2

Input/Output

Video input VIDEO: phono type
Composite video: 1 Vp-p ±2 dB sync negative (75 ohms terminated)
S VIDEO: Y/C mini DIN 4-pin type (male)
Y (luminance): 1 Vp-p ±2 dB sync negative (75 ohms terminated)
C (chrominance): burst 0.286 Vp-p ±2 dB (NTSC) (75 ohms terminated), burst 0.3 Vp-p ±2 dB (PAL) (75 ohms terminated)

INPUT A HD D-sub15-pin (female)
Analog RGB/component:
R/R-Y: 0.7 Vp-p ±2 dB (75 ohms terminated)
G: 0.7 Vp-p ±2 dB (75 ohms terminated)
G with sync/Y: 1 Vp-p ±2 dB sync negative (75 ohms terminated)
B/B-Y: 0.7 Vp-p ±2 dB (75 ohms terminated)
SYNC/HD:
Composite sync input: 1-5 Vp-p high impedance, positive/negative
Horizontal sync input: 1-5 Vp-p high impedance, positive/negative
VD:
Vertical sync input: 1-5 Vp-p high impedance, positive/negative

AUDIO Stereo minijack
500 mVrms, impedance more than 47 kilohms

Memory Stick slot × 1

USB hub Up (B type: female) × 1
Down (A type: female) × 1

Safety regulations
UL1950, cUL (CSA No. 950), FCC Class B, IC Class B, NEMKO (EN60950), CE (LVD, EMC), C-Tick

General

Dimensions 275 × 65 × 214 mm (10 7/8 × 2 5/8 × 8 1/2 inches) (w/h/d) (with the front cover closed, without the projection parts)

Mass Approx. 2.5 kg (5 lb 8 oz)

Power requirements
AC 100 to 240 V, 1.9–0.8A, 50/60 Hz

Power consumption
Max. 190 W
(Standby mode: 5 W)

Heat dissipation
648.4 BTU

Operating temperature
0°C to 35°C (32°F to 95°F)

Operating humidity
35% to 85% (no condensation)

Storage temperature
–20°C to 60°C (–4°F to 140°F)

Storage humidity
10% to 90%

Supplied accessories
Remote Commander RM-PJM11 (1)
Size AA (R6) batteries (2)
HD D-sub 15 pin cable (2 m) (1) (1-791-992-21)
USB cable A type - B type (1) (1-790-081-31)
Application software (1)
Memory Stick (8 Mbyte) (1)
Carrying case (1)
AC power cord (1)
Air filter (for replacement) (1)
Operating Instructions (1)
Operating Instructions for **Memory Stick** (1)
Quick Reference Card (1)
Ferrite core (1)

Design and specifications are subject to change without notice.

Optional accessories

Projector Lamp
LMP-C121 (for replacement)

Signal Cable SMF-402 (HD D-sub 15-pin (male) ⟷ 3 × phono type (male))

Monitor Cable
SMF-410 (HD D-sub 15 pin (male) ⟷ HD D-sub 15 pin (male))

Signal Adapter
ADP-20 (Macintosh ⟷ HD D-sub 15-pin)

Screens 50-inch Portable Screen VPS-50C[1)]
100-inch Flat Screen VPS-100FH

Some of the items may not be available in some areas. For details, please consult your nearest Sony office.

1) VPS-50C may not be available in some areas. For details, please consult your nearest Sony office.

Pin assignment

INPUT A connector (HD D-sub 15-pin, female)

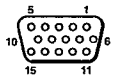

1	R/R-Y	9	N.C.
2	G/Y	10	GND
3	B/B-Y	11	GND
4	GND	12	DDC/SDA
5	GND	13	HD/C.Sync
6	GND (R)	14	VD
7	GND (G)	15	DDC/SCL
8	GND (B)		

Input signals and adjustable/setting items

PICTURE CTRL menu

Item	Input signal				
	Video or S video (Y/C)	Component	Video GBR	Computer/MS	B&W
CONTRAST	●	●	●	●	●
BRIGHT	●	●	●	●	●
COLOR	●	●	●	–	–
HUE	● (NTSC 3.58/4.43 only)	●	●	–	–
SHARP	●	●	●	–	●
RGB ENHANCER	–	–	–	●	–
D. PICTURE	●	●	●	–	●
GAMMA MODE	–	–	●	●	–
COLOR TEMP	●	●	●	●	●
COLOR SYS	●	–	–	–	●
VOLUME	●	●	●	●	●

● : Adjustable/can be set
– : Not adjustable/cannot be set

INPUT SETTING menu

Item	Input signal					
	Video or S video (Y/C)	Component	Video GBR	Computer	B&W	MS
DOT PHASE	–	–	–	●	–	–
SIZE H	–	–	–	●	–	–
SHIFT	●	●	●	●	●	–
SCAN CONV	–	–	–	● (lower than SVGA)	–	–
ASPECT	●	●	●	–	●	–

● : Adjustable/can be set
– : Not adjustable/cannot be set

Preset signals

Memory No.	Preset signal		fH (kHz)	fV (Hz)	Sync	SIZE
1	Video 60 Hz		15.734	59.940		
2	Video 50 Hz		15.625	50.000		
3	15k RGB/Component 60 Hz		15.734	59.940	S on G/Y or Composite Sync	
4	15k RGB/Component 50 Hz		15.625	50.000	S on G/Y or Composite Sync	
6	640 × 350	VGA mode 1	31.469	70.086	H-pos, V-neg	800
7		VGA VESA 85 Hz	37.861	85.080	H-pos, V-neg	832
8	640 × 400	PC-9801 Normal	24.823	56.416	H-neg, V-neg	848
9		VGA mode 2	31.469	70.086	H-neg, V-pos	800
10		VGA VESA 85 Hz	37.861	85.080	H-neg, V-pos	832
11	640 × 480	VGA mode 3	31.469	59.940	H-neg, V-neg	800
12		Macintosh 13"	35.000	66.667	H-neg, V-neg	864
13		VGA VESA 72 Hz	37.861	72.809	H-neg, V-neg	832
14		VGA VESA 75 Hz	37.500	75.000	H-neg V-neg	840
15		VGA VESA 85 Hz	43.269	85.008	H-neg V-neg	832
16	800 × 600	SVGA VESA 56 Hz	35.156	56.250	H-pos, V-pos	1024
17		SVGA VESA 60 Hz	37.879	60.317	H-pos, V-pos	1056
18		SVGA VESA 72 Hz	48.077	72.188	H-pos, V-pos	1040
19		SVGA VESA 75 Hz	46.875	75.000	H-pos, V-pos	1056
20		SVGA VESA 85 Hz	53.674	85.061	H-pos, V-pos	1048
21	832 × 624	Macintosh 16"	49.724	74.550	H-neg, V-neg	1152
22	1024 × 768	XGA VESA 43 Hz	35.522	43.479	H-pos, V-pos	1264
23		XGA VESA 60 Hz	48.363	60.004	H-neg V-neg	1344
24		XGA VESA 70 Hz	56.476	70.069	H-neg V-neg	1328
25		XGA VESA 75 Hz	60.023	75.029	H-pos, V-pos	1312
26		XGA VESA 85 Hz	68.677	84.997	H-pos, V-pos	1376
27	1152 × 864	SXGA VESA 70 Hz	63.995	70.016	H-pos, V-pos	1472
28		SXGA VESA 75 Hz	67.500	75.000	H-pos, V-pos	1600
29		SXGA VESA 85 Hz	77.487	85.057	H-pos, V-pos	1568
30	1152 × 900	Sunmicro LO	61.795	65.960	H-neg, V-neg	1504
31		Sunmicro HI	71.713	76.047	H-neg, V-neg	1472
32	1280 × 960	SXGA VESA 60 Hz	60.000	60.000	H-pos, V-pos	1800
33		SXGA VESA 75 Hz	75.000	75.000	H-pos, V-pos	1728
34	1280 × 1024	SXGA VESA 43 Hz	46.433	43.436	H-pos, V-pos	1696
35		SGI-5	53.316	50.062	S on G	1680
36		SXGA VESA 60 Hz	63.974	60.013	H-pos, V-pos	1696
37		SXGA VESA 75 Hz	79.976	75.025	H-pos, V-pos	1688
38		SXGA VESA 85 Hz	91.146	85.024	H-pos, V-pos	1296

Notes

- Whan a signal other than the preset signals shown above is input, the picture may not appear properly.
- The signal from the **Memory Stick** is displayed as No. 53 to 60.

Warning on power connection

Use a proper power cord for your local power supply.

	The United States, Canada	Continental Europe	UK	Australia	Japan
Plug type	YP-11	YP-21	SP-61	B8	YP-13
Female end	YC-13L	YC-13L	YC-13L	C7-2	YC-13L
Cord type	SPT-2	H03VVH2-F	H03VVH2-F	H03VVH2-F	VFF
Rated Voltage & Current	10A/125V	2.5/250V	2.5A/250V	2.5A/250V	7A/125V
Safety approval	UL/CSA	VDE	BS	SAA	DENTORI

Index

A

Adjuster 10
Adjusting
  memory of the settings 25
  the picture 22, 26
  the picture size/shift ... 28
Air filter 32
ASPECT 28
AUTO INPUT SEL 29

B

BRIGHT 26

C

COLOR 26
COLOR SYS (System) .. 27
COLOR TEMP 26
Connections
  component equipment 17
  computer 15
  VCR 17
CONTRAST 26

D

D. (Dynamic) PICTURE 26
Digital Zoom function 24
DOT PHASE 27

G

GAMMA MODE 26

H

HUE 26

I

INPUT A connector 11
  pin assignment 39
INPUT SETTING menu 27
INPUT-A 29
INSTALL SETTING
  Menu 30
Installation examples 14
  notes 36
  unsuitable conditions .. 36
  unsuitable installation . 36

L

Lamp replacement 31
LANGUAGE 29
  selecting the menu
    language 19
Location and function of
  controls
  connector panel 11
  control panel 10
  front/side/bottom 8
  rear/left side 8
  Remote Commander .. 12

M

Memory Stick slot 11
Menu
  clearing the menu
    display 25
  INPUT SETTING
    menu 27
  PICTURE CTRL
    menu 26
  SET SETTING menu . 29
  using the menu 25
MENU BACKGRND 30
MENU COLOR 30
MENU POSITION 30
Message
  caution 35
  warning 35

O

Optional accessories 39

P

PICTURE CTRL menu .. 26
Pin assignment 39
Power
  turn on 21
POWER SAVING 8, 29
Precautions 6

R

Remote Commander 12
  location and function of
    controls 12
Remote control detector
  front 8
  rear 9
Reset
  resettable items 25
  resetting the item 25
RGB ENHANCER 26

S

SCAN CONV (Scan
  converter) 28
Screen size 14, 37
SET SETTING menu 29
SHARP 26
SHIFT 28
SIZE H 28
Specifications 37
STATUS (on-screen
  display) 29
Supplied accessories 38

T

Troubleshooting 33

U

USB connector 11, 16

V

Ventilation holes
  exhaust 9
  intake 9
VOLUME 27

http://www.world.sony.com/
Printed on recycled paper
Sony Corporation Printed in Japan

SONY

4-083-790-11(1)

LCD Data Projector

Operating Instructions for **Memory Stick** GB

Mode d'emploi du **Memory Stick** FR

Manual de instrucciones de **Memory Stick** ES

MEMORY STICK™

VPL-CX3

© 2001 Sony Corporation

Table of Contents

Overview

Features 4
Precautions 4
About This Manual 4
Using a **Memory Stick** 5

Setting Up

Communicating Data by Using the **Memory Stick** 7
When Using the Projector's **Memory Stick** Slot 7
When Using the Computer's **Memory Stick** Slot 8
Making the Presentation 9
Operating the MS Home 10

Viewing the Slide

Sliding Material for a Presentation — Presentation Viewer 11
Executing the Slide Show Promptly 13
Sliding a Picture File of the JPEG Format — JPEG Viewer 14
Executing the Slide Show Promptly 16
Operating the Picture File 17
Displaying the Picture File on the Full Screen 18
Protecting an Important File 18
Rotating a Picture File 18
Registering a File as the Startup Picture 18
Deleting a Picture File 18

Useful Settings

Starting a Presentation Automatically — Autorun 19
Projecting a Selected File When the Power is Turned on — Startup 20

Initializing

Initializing a **Memory Stick** 21

Other

Troubleshooting 22

GB

Features

When you memorize presentation material converted by the Projector Station for Presentation (supplied software) or the picture file recorded by a digital camera in the **Memory Stick**, you can easily make effective presentations without a computer.

Presentation Viewer

After you have converted Microsoft PowerPoint files by the Projector Station for Presentation to the file which offers the most advantages for projection on the projector, you can make a slide show.

JPEG Viewer

You can make the slide show by using a picture file (DCF [1]-compatible) recorded by a digital camera. You can set the effect when the slide is displayed, the way (automatic or manual) the slide is exchanged and the period for which one slide is displayed.

1) DCF: Design rules for Camera File systems

Autorun

When the **Memory Stick** with the picture file for which the Autorun function is set by the Projector Station for Presentation is inserted in the **Memory Stick** Slot, the input is automatically switched to MS and the slide show starts.

Startup

When the power is turned on, the selected picture file is projected for about 1 minute. You can adjust the focus and zoom without a signal from other equipment.
You can also select the original picture or the registered picture file in the **Memory Stick**.

Precautions

- To prevent data loss, make backup of data frequently. In no event will Sony be liable for any loss of data.
- Unauthorized recording may be contrary to the provisions of copyright law.
- The **Memory Stick** application software may be modified or changed by Sony without prior notice.

About This Manual

This manual explains the operations when the **Memory Stick** is used.

For details on making the presentation material, see the Operating Instructions of the Projector Station for Presentation (CD-ROM, supplied).

For operations other than by the **Memory Stick**, *see the supplied Operating Instructions.*

- Microsoft and PowerPoint are registered trademarks and trademarks of the Microsoft Corporation in the United States and/or other countries.
- Adobe and Photoshop are either registered trademarks or trademarks of Adobe Systems Incorporated in the United States and /or other countries.

Using a Memory Stick

On Memory Sticks

Memory Stick is a new compact, portable and versatile IC recording medium with a data capacity that exceeds a floppy disk. **Memory Stick** is specially designed for exchanging and sharing digital data among **Memory Stick** compatible products. Because it is removable, **Memory Stick** can also be used for external data storage.

Types of Memory Sticks

There are two types of **Memory Sticks**: **MagicGate Memory Sticks** that are equipped with the MagicGate copyright protection technology and general **Memory Sticks**. You can use both types of **Memory Stick** with your projector. However, because your projector does not support the MagicGate standards, data recorded with your projector is not subject to MagicGate copyright protection.

On MagicGate

MagicGate is copyright protection technology that uses encryption technology.

Format to save a file

Material for a presentation converted by the Projector Station for Presentation is saved in the following file formats in the **Memory Stick**.

- Image files (DCF-compatible) compressed in the JPEG (Joint Photographic Experts Group) format (extension .jpg).
- The Sony Projector presentation file (SPP file), which is an original file format of Sony. This file integrates information such as the destination and the setting information of the image file, etc.

Before using a Memory Stick

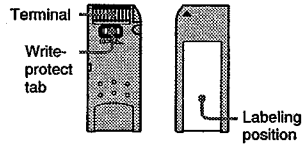

- You cannot record or erase still images when the write-protect tab on the **Memory Stick** is set to LOCK.
- We recommend backing up important data.
- Image data may be damaged in the following cases:
  - If you remove the **Memory Stick**, turn the power off, or detach the battery for replacement when the access lamp is flashing.
  - If you use a **Memory Stick** near static electricity or magnetic fields.
  - If you disconnect the USB cable while reading or writing a data.

Notes

- Prevent metallic objects or your finger from coming into contact with the metal parts of the connecting section.
- Do not attach any other material than the supplied label onto the label space.
- Attach the label to the prescribed labeling position. Make sure the label is attached to the labeling position properly.
- Do not bend, drop or apply strong shock to a **Memory Stick**.
- Do not disassemble or modify a **Memory Stick**.
- Do not let the **Memory Stick** get wet.
- Do not use or keep a **Memory Stick** in locations that are:
  - Extremely hot such as in a car parked in the sun or under the scorching sun.
  - Under direct sunlight.
  - Very humid or subject to corrosive gases.
- When you carry or store a **Memory Stick**, put it in its case.

About formatting Memory Sticks

When **Memory Sticks** are shipped from the factory, they are already formatted to a special standard format. When you format **Memory Sticks**, we recommend formatting them on this unit.

Caution when formatting Memory Sticks on a personal computer

Pay attention to the following points when formatting **Memory Sticks** on the personal computer, for example, that you are using.
Operation of **Memory Sticks** formatted on the personal computer is not guaranteed on this unit. To use a **Memory Stick** that has been formatted on the personal computer, the **Memory Stick** must be reformatted on this unit. Note, that, in this case all data stored on the **Memory Stick** will be lost.

Notes on image data compatibility

Image data files saved to a **Memory Stick** by using the software conform to the Design Rules for Camera File Systems universal standard established by JEITA (Japan Electronics and Information Technology Industries Association).
The JPEG file converted by Adobe Photoshop, etc. must be converted to JPEG format (DCF-compatible) again by the Projector Station for Presentation.

Access Lamp

If the access lamp is turned on or is flashing, data is being read from or written to the **Memory Stick**. Do not shake the computer or projector or subject them to shock. Do not turn off the power of the computer and projector, disconnect the USB cable or remove the **Memory Stick**. This may damage the data.

About the supplied Memory Stick

Sample data for a presentation is memorized.

- **Memory Stick** and MEMORY STICK are trademarks of Sony Corporation.
- **MagicGate Memory Stick** and MG are trademarks of Sony Corporation.

Communicating Data by Using the Memory Stick

When Using the Projector's Memory Stick Slot

Connecting the projector and the computer by using the USB cable

When you connect the computer and the projector

- Use a cable that has the correct connectors.
- To insert the **Memory Stick**, see "Making the Presentation" on page 9.

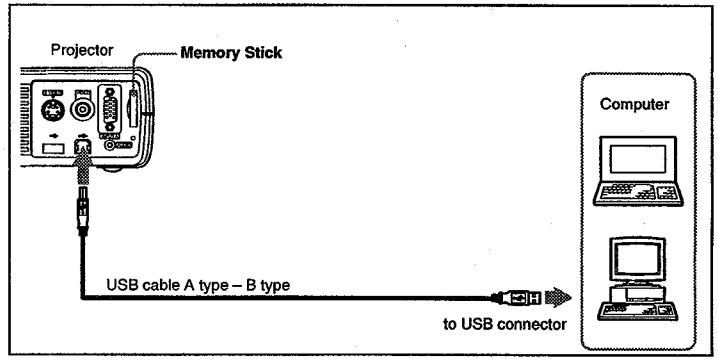

Notes

- If you turn on the computer while the projector and the computer are connected to the USB cable, the computer may not start correctly. If this happens, turn off the computer, disconnect the cable and restart the computer.
- When the access lamp lights on, do not disconnect the USB cable. The data may be damaged.
- There is no guarantee that all recommended computers will work properly.

When Using the Computer's Memory Stick Slot

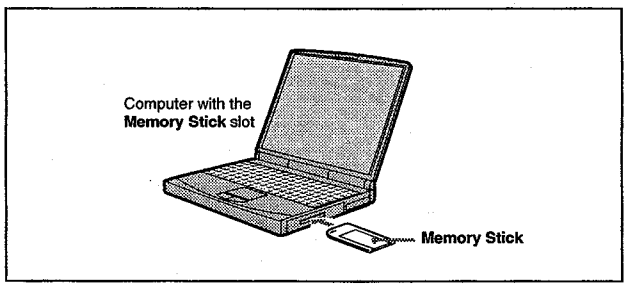

For details, refer to your computer manual.

Making the Presentation

Insert the **Memory Stick** into the **Memory Stick** slot on the side of the projector.

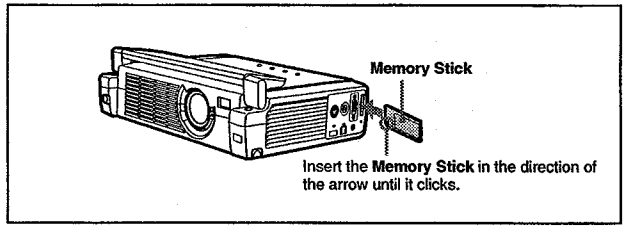

To remove the Memory Stick

When the access lamp is turned off, press the **Memory Stick** and remove your hand. As the lock is released, remove the **Memory Stick**.

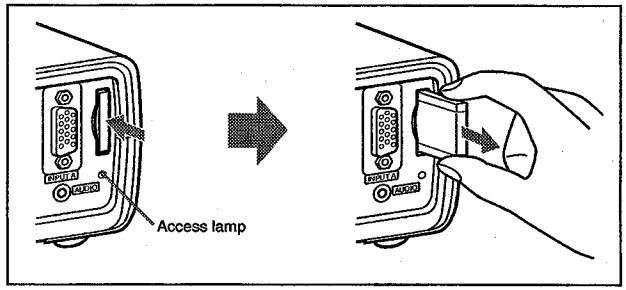

Operating the MS Home

The initial display for MS input is the MS home. The MS home is used for setting and executing the event (e.g., selecting the viewer), setting the Autorun and Startup and initializing the **Memory Stick**. The guide for the key operation is displayed at the bottom of the MS home display. Use the Remote Commander or the control panel for setting. The selected item is displayed in yellow.

For details on each operation, see each page.

1 Press the INPUT key to select MS.
The MS home appears.

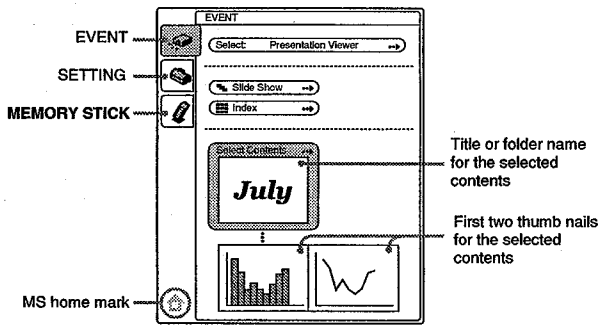

2 Use the ↑ or ↓ key to select the item, then press the ENTER key.

3 Use the ↑ or ↓ key to make the setting on an item, then press the ENTER key.

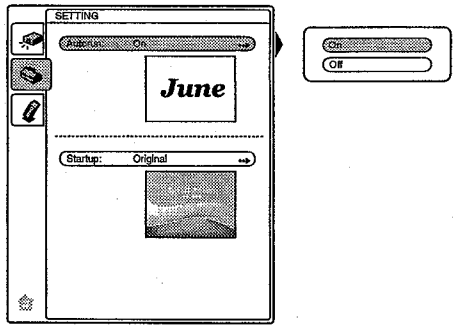

Sliding Material for a Presentation — Presentation Viewer

After you have converted Microsoft PowerPoint files by the Projector Station for Presentation to the file which offers the most advantages for projection on the projector, you can make a slide show.

For details on making the presentation material, see the Operating Instructions of the Projector Station for Presentation (CD-ROM, supplied).

1 Press the INPUT key to select MS.
The MS home appears.

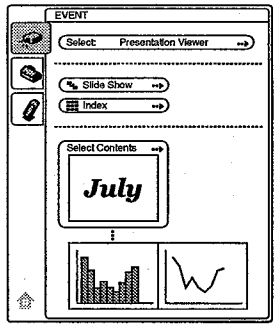

2 Select "EVENT", then press the ENTER key.

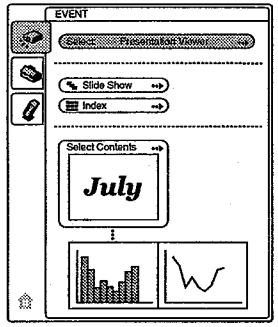

(Continued)

3 Press the ENTER key again.

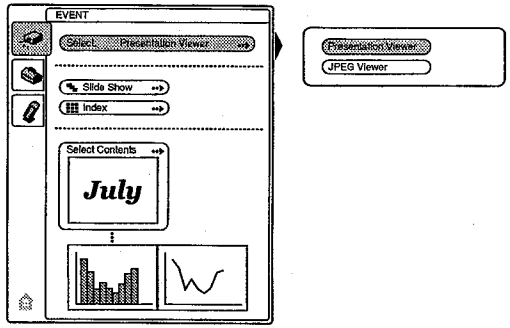

4 Select "Presentation Viewer", then press the ENTER key.

5 Select "Select Contents", then press the ENTER key.

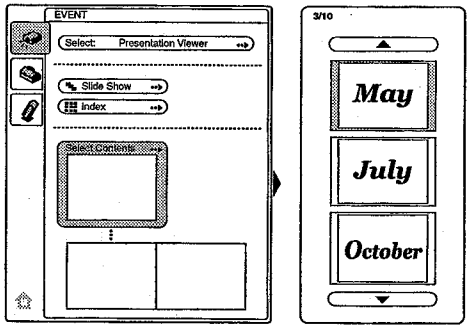

6 Select the contents for the presentation, then press the ENTER key.
The title and first two thumb nails are displayed.

7 Select "Slide Show", then press the ENTER key.

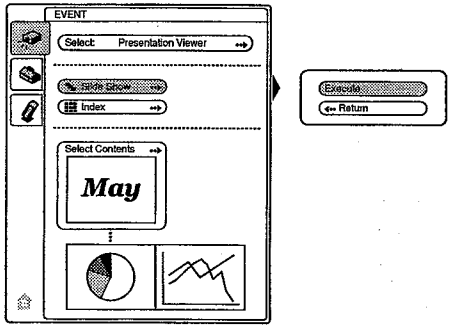

8 Select "Execute", then press the ENTER key.

To execute the slide show

When the slide show setting is set to "Auto" by the Projector Station for Presentation, the slide show starts automatically. When you want to end the slide show, press the MS SLIDE or ENTER key. When it is set to "Manual", press the following keys for the slide show.
→/↓: to display the next slide
←/↑: to display the previous slide
MS SLIDE/ENTER: to end the slide show

To return to the MS home before executing the slide show

Select "Return".

Executing the Slide Show Promptly

As the settings are memorized even if you change the input after the setting of steps **1** to **6**, press the MS SLIDE key on the Remote Commander just as you start the presentation. The input is changed to MS and the slide show starts promptly. To end the slide show, press the MS SLIDE or ENTER key again.

Sliding a Picture File of the JPEG Format — JPEG Viewer

You can make the slide show by using a picture file (DCF-compatible) of the JPEG format recorded by a digital camera.

For operation of the index picture, see "Operate the Picture File" on page 17.

1 Press the INPUT key to select MS.
The MS home appears.

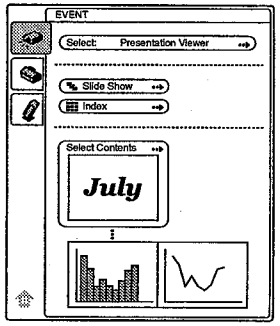

2 Select "EVENT", then press the ENTER key.

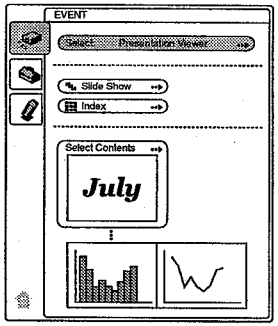

3 Press the ENTER key again.

4 Select "JPEG Viewer", then press the ENTER key.

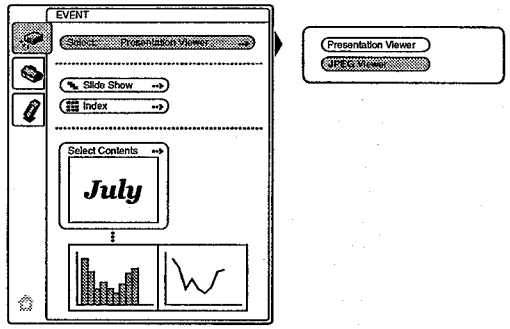

5 Select "Select Contents", then press the ENTER key.

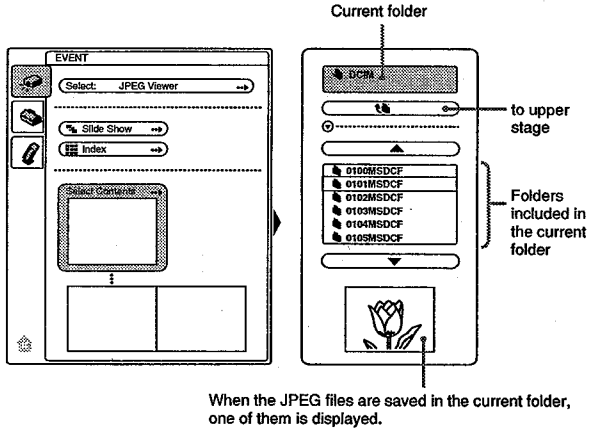

6 Select the folder for your presentation, then press the ENTER key.
Several JPEG files are included in the folder and they are called contents.
You must select content when you use the JPEG viewer.
When you want to select folder other than that displayed, select ▲ or ▼, then press the ENTER key.

7 Press the ENTER key.
The folder name and the first two thumb nails are displayed.
When you want to view all of the selected contents, select "Index".

(Continued)

8 Select "Slide Show", then press the ENTER key.

9 Select each item, then press the ENTER key.

10 Set the item, then press the ENTER key.

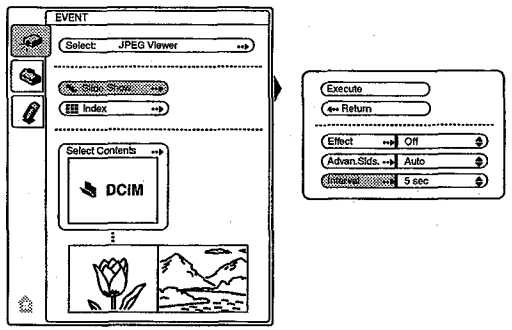

Effect: set the effect when the slide is displayed.
Advan. Slids.: set the automatic or manual slide
Interval: set the period for which one slide is displayed. When "Advan. Slids." is set to "Manual", it does not work. The time is about right.

11 Select "Execute", then press the ENTER key.

To execute the slide show

When the slide show setting is set to "Auto", the slide show starts automatically. When you want to end the slide show, press the MS SLIDE or ENTER key. When it is set to "Manual", press the following keys for the slide show.
→/↓: to display the next slide
←/↑: to display the previous slide
MS SLIDE/ENTER: to end the slide show

To return to the MS home before executing the slide show

Select "Return".

Executing the Slide Show Promptly

As the settings are memorized even if you change the input after the setting of steps **1** to **10**, press the MS SLIDE key on the Remote Commander just as you start the presentation. The input is changed to MS and the slide show starts promptly. To end the slide show, press the MS SLIDE or ENTER key again.

Operating the Picture File

When the "Presentation Viewer" is selected, you can display the index pictures or one of the index pictures on the full screen.
When the "JPEG Viewer" is selected, you can display the index screen or one of the index pictures on the full screen, protect an important file or rotate a picture file, register a file as the startup picture or delete a picture file.

To display the index screen, select "Index" in the MS home, then press the ENTER key. Select the desired picture file and then press the ENTER key to display the index menu. To return to the MS home, select "Return".

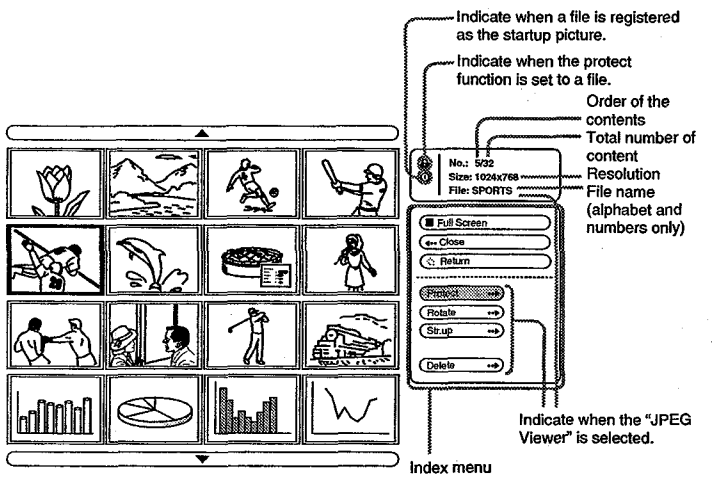

When the picture files are more than 16 and you want to display index pictures other than the displayed one, select ▲ or ▼, then press the ENTER key.

When the MS SLIDE key is pressed in the index screen, the slide show starts from the selected picture.

Displaying the Picture File on the Full Screen

Select the picture file and "Full Screen", then press the ENTER key.
The selected picture is displayed on the full screen.
When you want to start the slide show from the selected picture, press the following keys.

→/↓: to display the next slide (the index screen is displayed after the last picture file.)
←/↑: to display the previous slide (the index screen is displayed after the first picture file.)
MS SLIDE/ENTER: to return to the index screen

Protecting an Important File

After selecting the file you want to protect, set "Protect" to "On" or "All On". When a file is protected, the protect mark is displayed.

Rotating a Picture File

After selecting the file you want to rotate, set "Rotate". The picture rotates 90° every pressing of the ENTER key.

Registering a File as the Startup Picture

You can register a picture file in the **Memory Stick** as the startup picture file which is displayed when the power is turned on.
Set "Str. up" to "Entry". When the file is registered, the startup mark is displayed.
When you want to use the registered picture file as the startup file, set "Startup" of the SETTING screen to "Custom" (see page 20.)

Note

As the setting of "Custom" is memorized in the **Memory Stick**, when you want to use the registered picture file as the startup file, insert the **Memory Stick** in the projector before turning on the projector.

Deleting a Picture File

You can delete the selected picture file or all picture files of the selected contents.

1 Select "Delete", then press the ENTER key.

2 Select the item, then press the ↑ key to delete the file(s).
Sel. Img.: delete the selected picture file
All Img.: delete all picture files of the selected contents
Close: when you do not delete the file

Starting a Presentation Automatically — Autorun

When the **Memory Stick** with the picture file for which the Autorun function is set by the Projector Station for Presentation is inserted in the **Memory Stick** slot, the input is automatically switched to MS and the slide show starts.

Setting the Autorun function

1 Select "SETTING" in the MS home, then press the ENTER key.

2 Select "Autorun", then press the ENTER key.

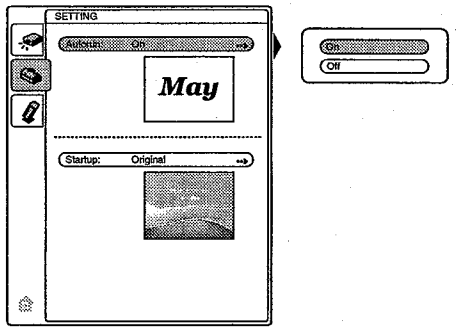

3 Select "On", then press the ENTER key.

When you do not want to use the autorun function

Set "Autorun" to "Off".

Notes

- When the autorun is not set to "On" by the Projector Station for Presentation, you can not use the autorun function to start the slide show even if you set "Autorun" to "On" in the MS home.
- When you want to use the autorun function for a picture file of the JPEG format, make the presentation material by the Projector Station for Presentation and set the autorun function to "On".

Projecting a Selected File When the Power is Turned on — Startup

When the power is turned on, the selected picture file is projected for about one minute.

When you want to use the registered picture file as the startup file, you must register a picture file as the startup file in the index screen (see page 18.)

1 Select "SETTING" in the MS home, then press the ENTER key.

2 Select "Startup", then press the ENTER key.

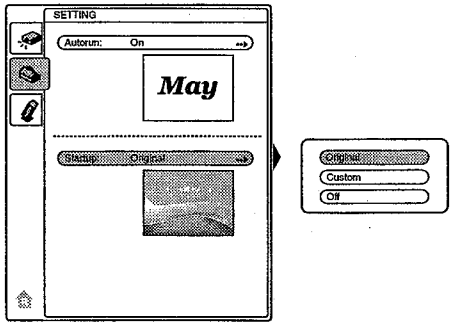

3 Select the item, then press the ENTER key.

Original: select the original picture memorized in the projector. The original picture cannot be changed.
Custom: select the picture file registered in the index screen which is saved in the **Memory Stick**
Off: when you do not set the startup.

Notes

- When you want to clear the startup screen while displaying it, press the ↑/↓/←/→ or ENTER key.
- When you want to use the registered file, insert the **Memory Stick** where the registered file is saved in the projector, then turn on the power.
- You can register one startup file per one **Memory Stick**.

Initializing a Memory Stick

When a **Memory Stick** cannot be used, initialize it by the projector. The data is cleared when the **Memory Stick** is initialized.

1 Select "**MEMORY STICK**" in the MS home, then press the ENTER key.

2 Press the ENTER key again.

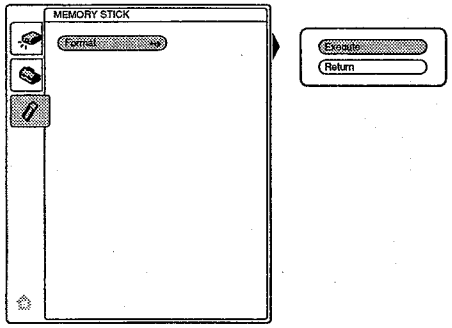

3 Select "Execute", then press the ENTER key.

4 Press the ↑ key to start initializing.

When you want to return the MS home before initializing the Memory Stick

Select "Return".

Notes

- When the **Memory Stick** is initialized, the protected picture file is also cleared.
- When the **Memory Stick** with the write-protect tab set to LOCK is initialized, the "**MEMORY STICK** locked" is displayed.
- While initializing the **Memory Stick**, the operations for the **Memory Stick** of the Projector Station for Presentation and the key operation in the MS home cannot be done.

Troubleshooting

If you have a problem with the MS home, check the following. If the problem persists, contact your nearest Sony dealer.

Problem	Cause and solution
Cannot access the **Memory Stick** drive.	• The **Memory Stick** has not been properly inserted. → Insert the **Memory Stick** again. • The projector and the computer have been connected with a USB cable, the cable has not been properly connected. → Check the cable connection. • If you are using a PC card adaptor, the PC card adaptor has not been properly inserted into the PC card slot in your computer → Insert the PC card adaptor properly.
Cannot save a file.	• The **Memory Stick** is full. → Delete unwanted files in the **Memory Stick**. • The write-protect tab on the **Memory Stick** has been set to LOCK. → Cancel the lock.
Cannot delete a file.	• The write-protect tab on the **Memory Stick** has been set to LOCK. → Cancel the lock. • The file is protected. → Release the protect in the Index screen.
Cannot format the **Memory Stick**.	• The write-protect tab on the **Memory Stick** has been set to LOCK. → Cancel the lock. • The **Memory Stick** is broken. → Use another **Memory Stick**.
Cannot delete all materials.	• The write-protect tab on the **Memory Stick** has been set to LOCK. → Cancel the lock. • The file is protected. → Release the protect in the Index screen.
Cannot insert the **Memory Stick** into the drive.	• The **Memory Stick** is not facing in the correct direction. → Insert the **Memory Stick** with the arrow mark pointing toward the **Memory Stick** slot of the projector.
When the slide show is made, the MS flashes.	• Picture files with different resolutions are used for the slide show. → Set the status of the SET SETTING menu to off. → Make the presentation material by using the Projector Station for Presentation.
When the slide show is made, a black picture appears.	• When picture files with different resolutions are used, a black picture appears. → Set the resolution of the picture files to the same setting. → Make the presentation material by using the Projector Station for Presentation.

Problem	Cause and solution
"USB access..." cannot be turned off.	• The USB communication stops. → After checking that the access lamp is turned off, turn off the projector (disconnect the AC power cord.)
The thumb nail is not displayed.	• The thumb nail is the JPEG format but not DCF-compatible. → Make the presentation material by using the Projector Station for Presentation.
The picture is not projected and the [?] or [?] appears.	• The file is not DCF-compatible. → Make the presentation material by using the Projector Station for Presentation.

On Display

When the following display appears in the screen, make the material for a presentation again by using in the Projector Station for Presentation.

	The picture file is the JPEG format but not DCF-compatible.
	There is the thumb nail but it is not DCF-compatible.
	There is no selected picture file.
	There is the picture file but no thumb nail.
	There is the picture file but the thumb nail is broken.
	The picture file is broken.

Section 2
Service Informations

2-1. Board Layout

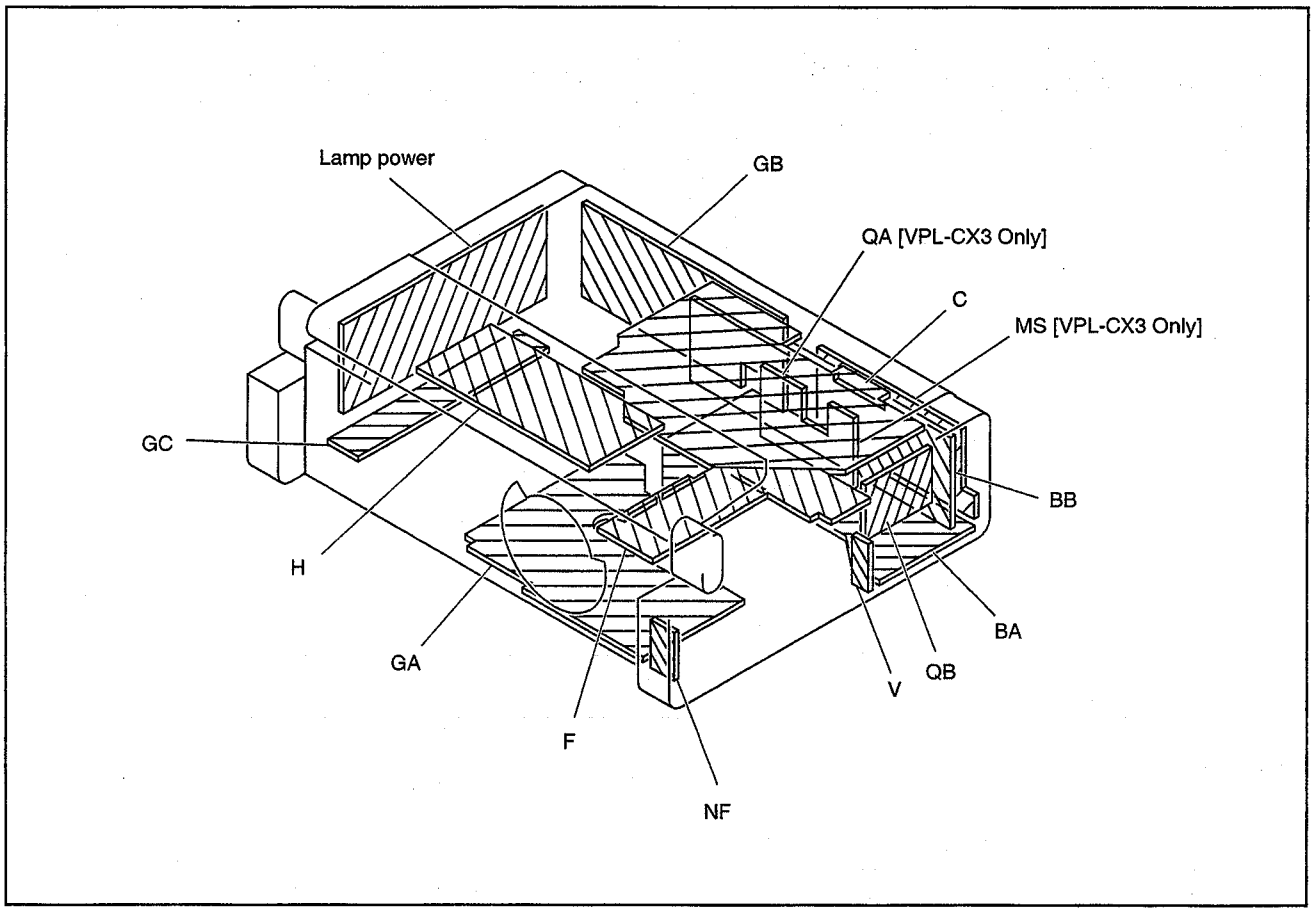

2-2. Disassembly and Extension Boards

2-2-1. Hood Block Assy Removal

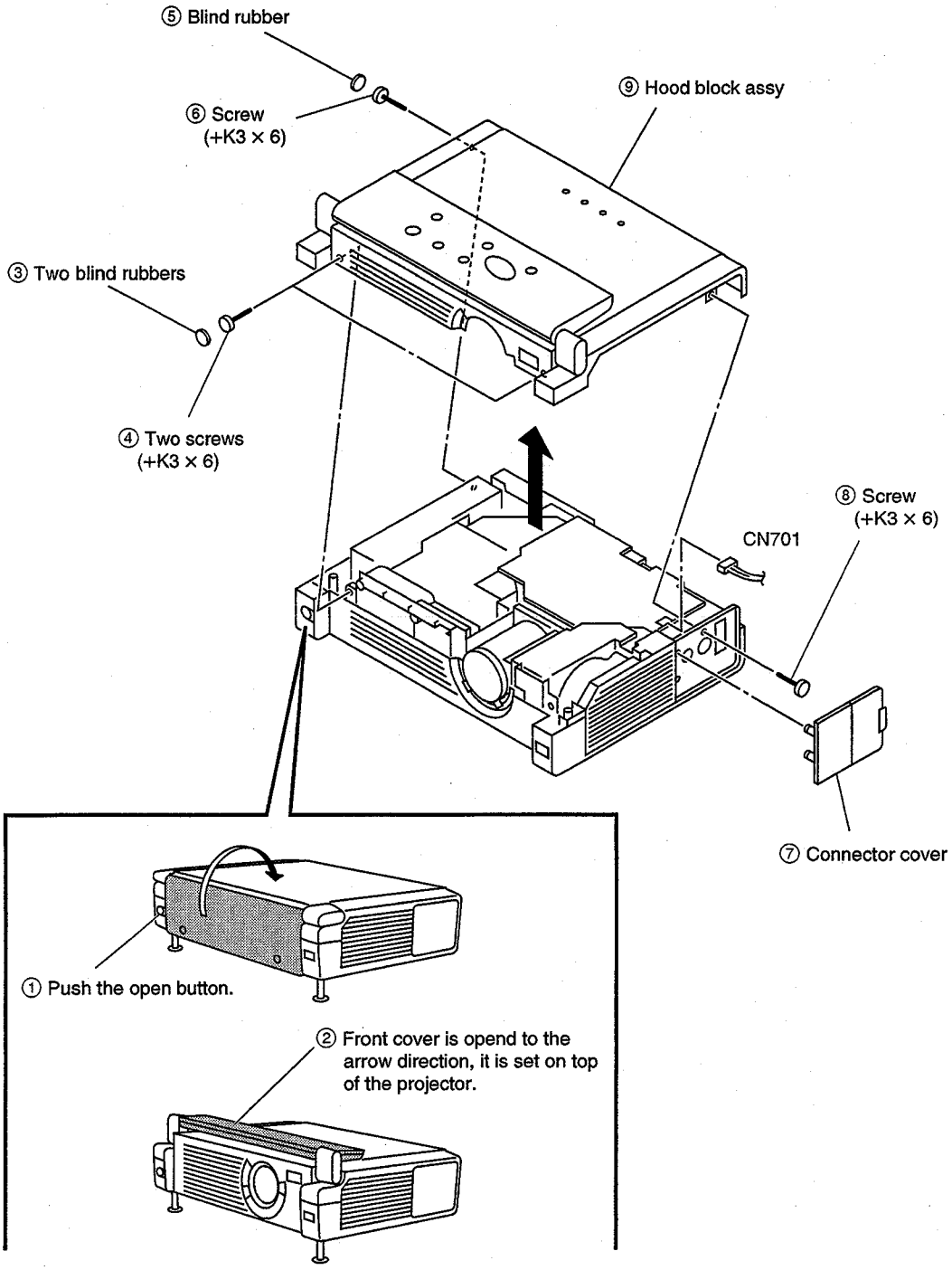

2-2-2. H Board Removal

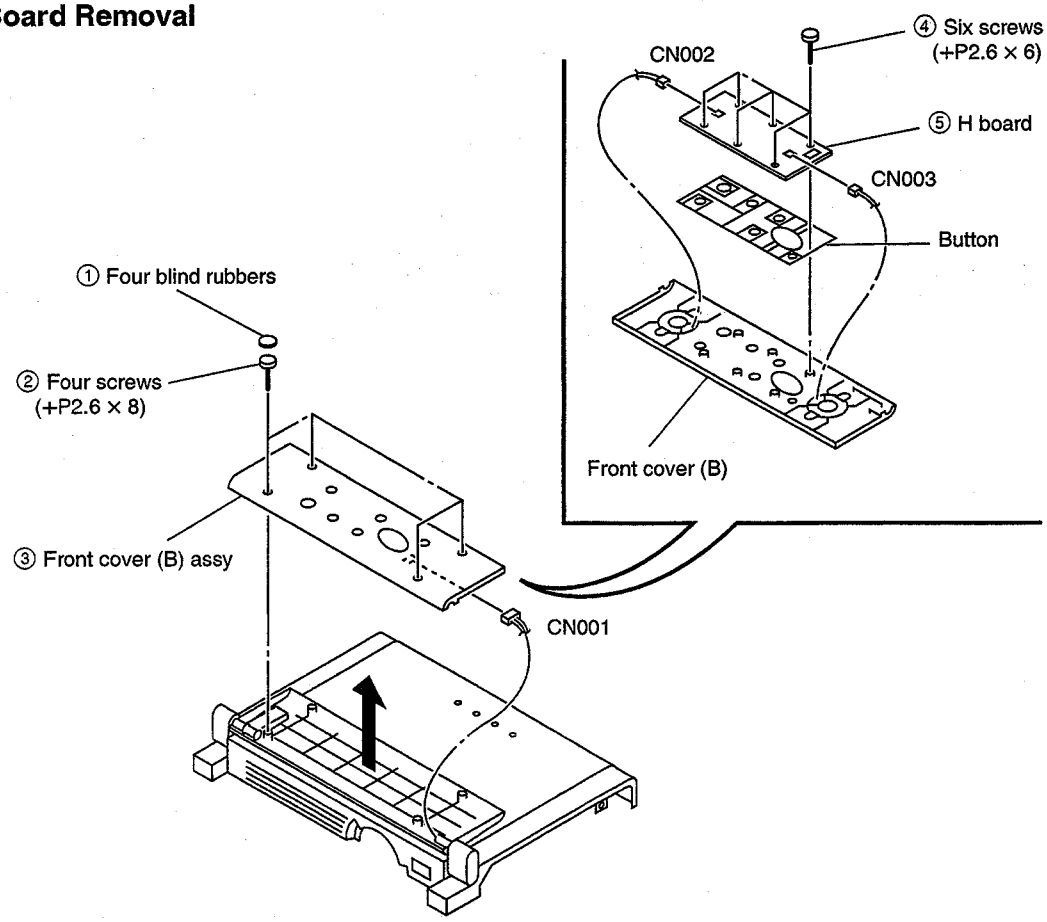

2-2-3. C Board Removal

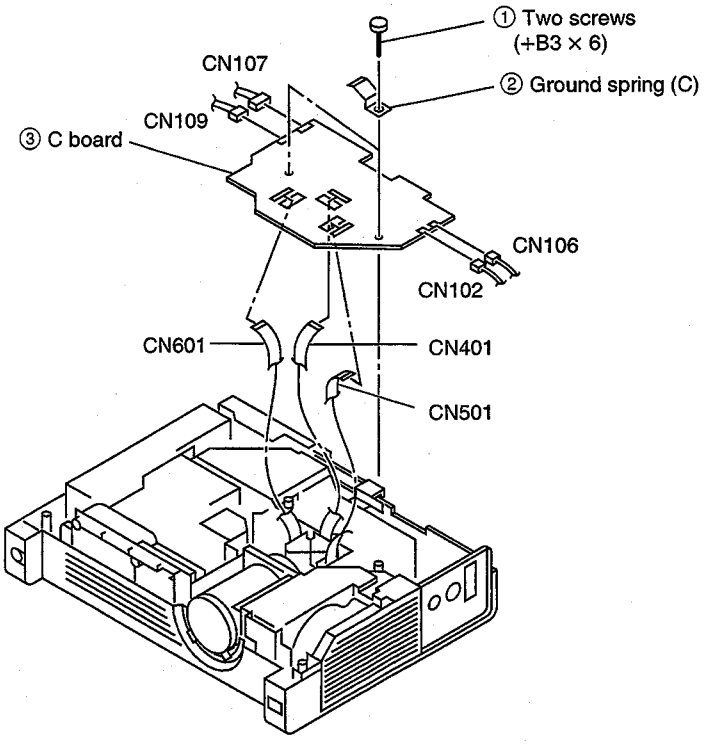

2-2-4. F Board Removal

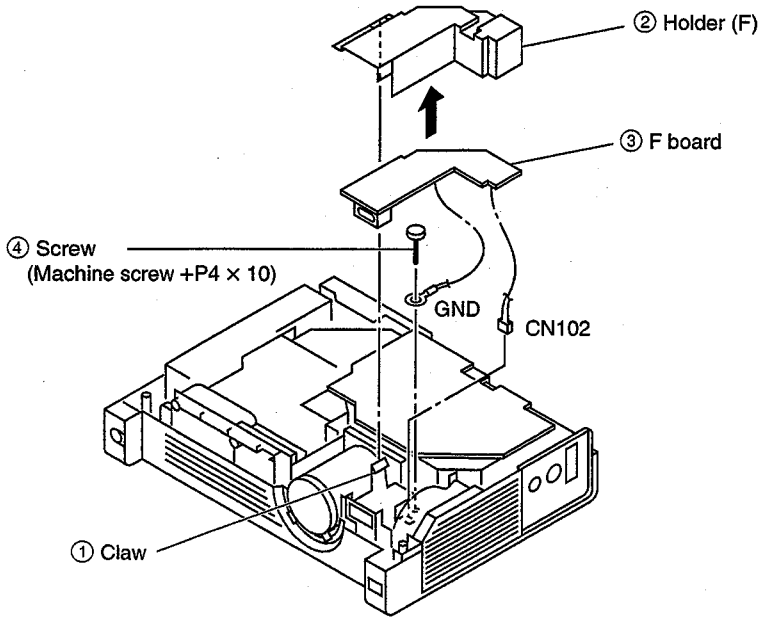

2-2-5. Optical Block Assy Removal

* Remove the C board. (Refer to Sec.2-2-3.)
* Remove the F board. (Refer to Sec.2-2-4.)

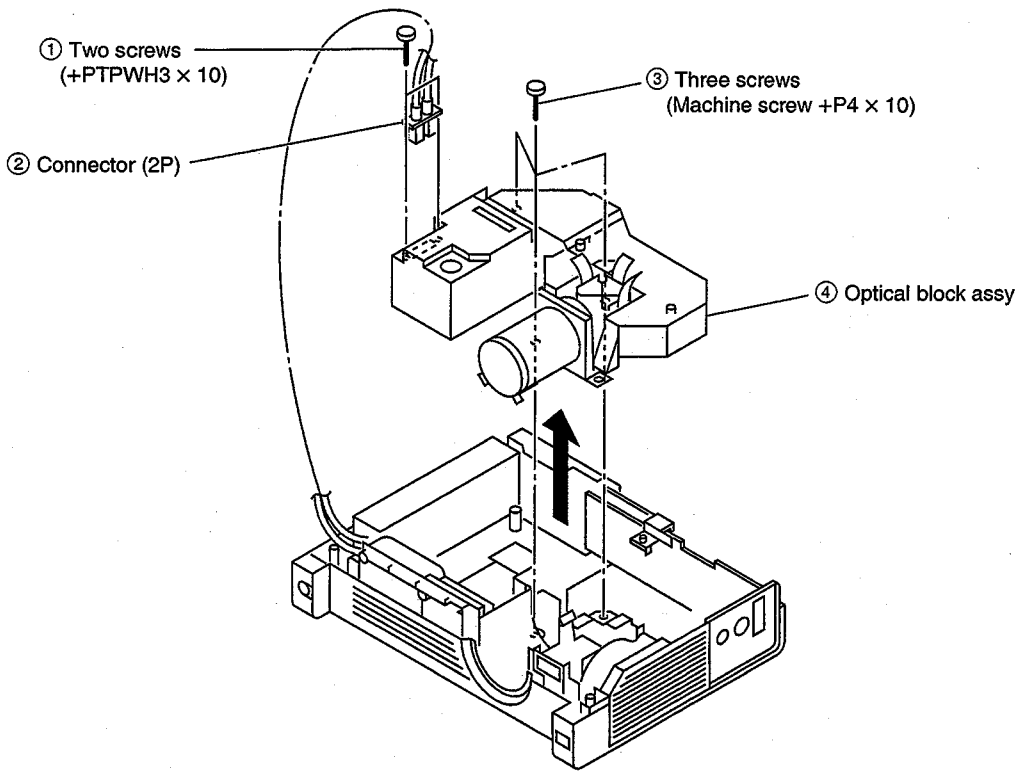

2-2-6. BB and GB Boards Removal [VPL-CS3/CX2]

* Remove the optical block assy. (Refer to Sec.2-2-5.)

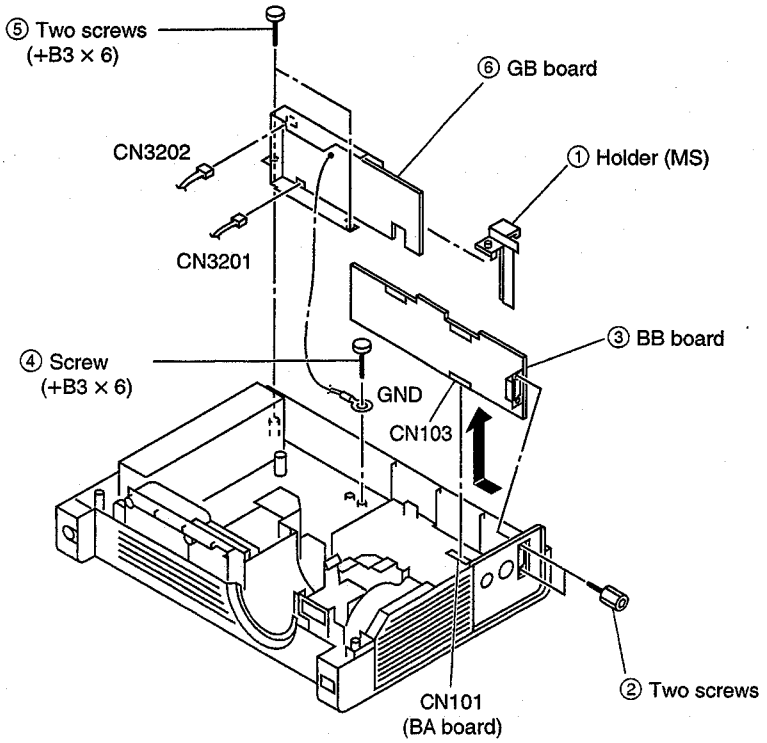

2-2-7. QA, BB, MS and GB Boards Removal [VPL-CX3]

* Remove the Optical block assy. (Refer to Sec.2-2-5.)

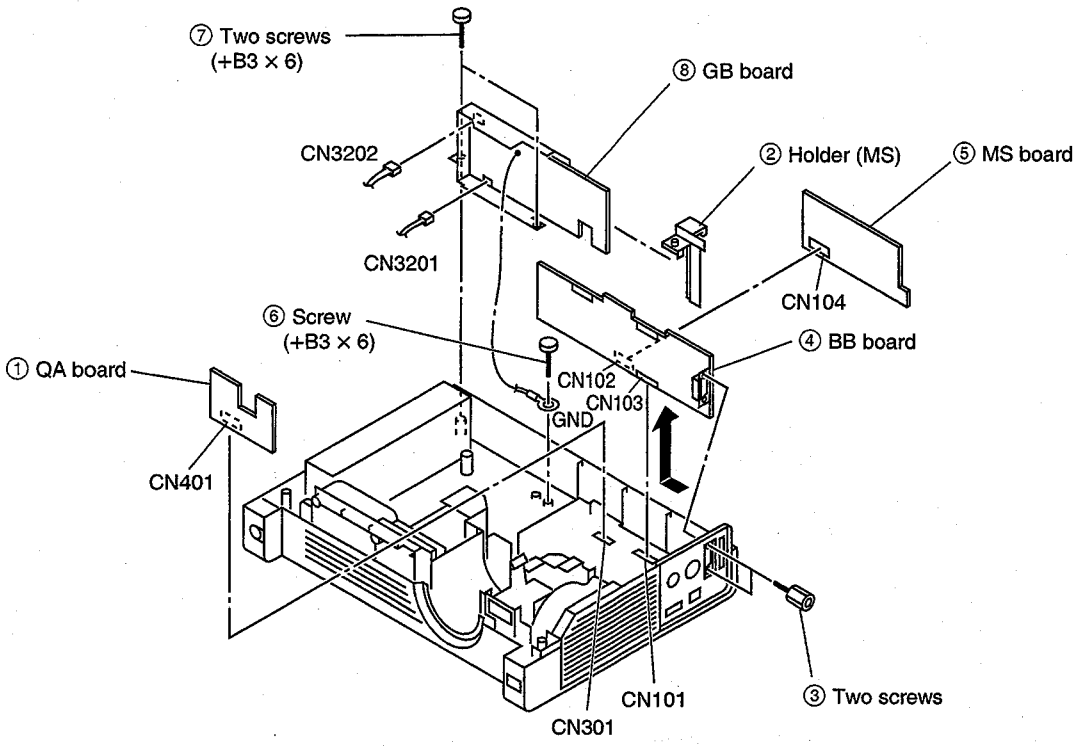

2-2-8. QB and BA Boards Removal [VPL-CS3/CX2]

* Remove the BB and GB boards. (Refer to Sec.2-2-6.)

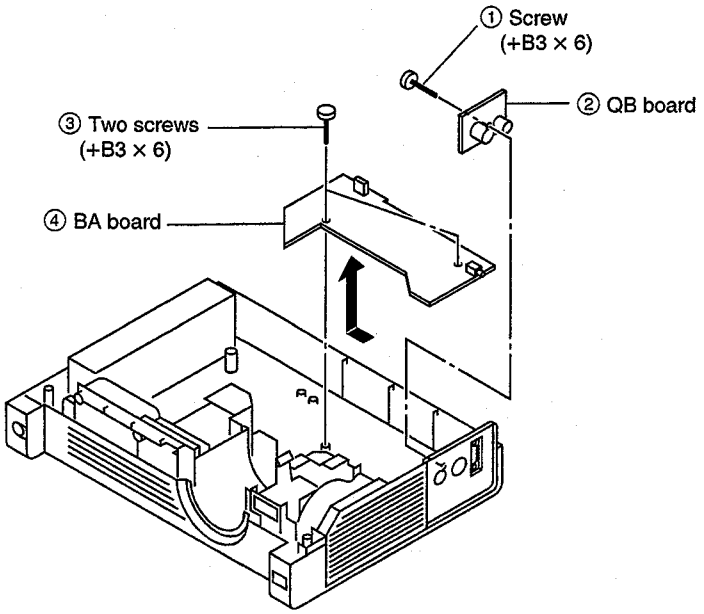

2-2-9. QB and BA Boards Removal [VPL-CX3]

* Remove the QA, BB, MS and GB boards. (Refer to Sec.2-2-7.)

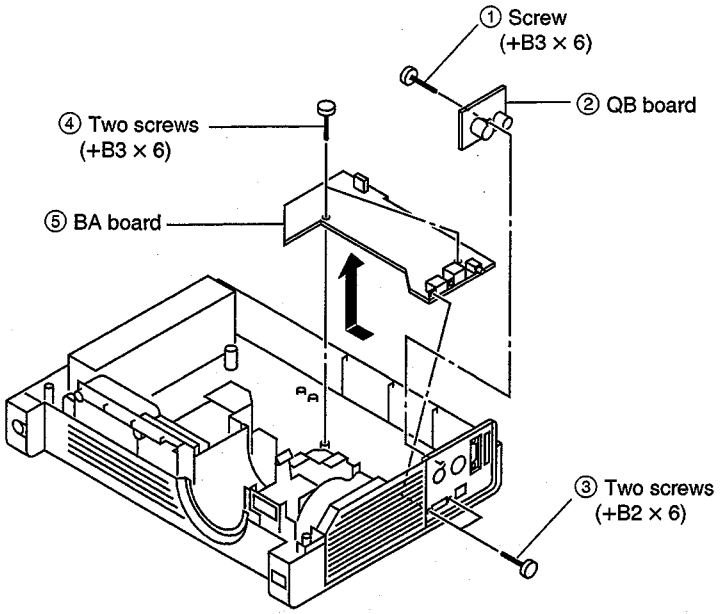

2-2-10. V Board Removal

* Remove the optical block assy. (Refer to Sec.2-2-5.)

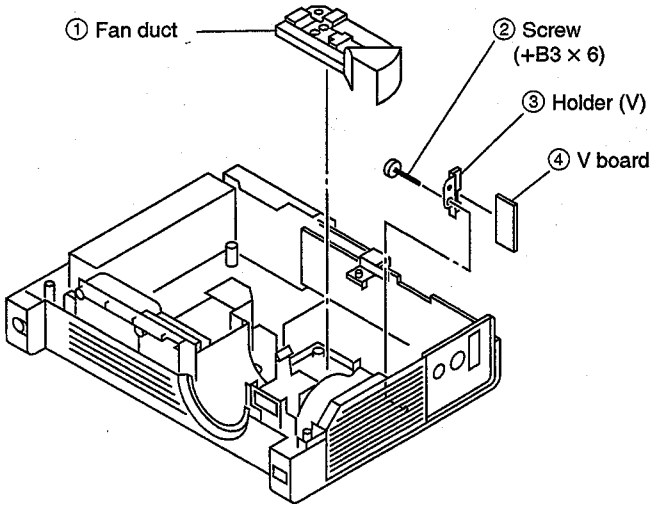

2-2-11. GA Board Removal

* Remove the optical block assy. (Refer to Sec.2-2-5.)

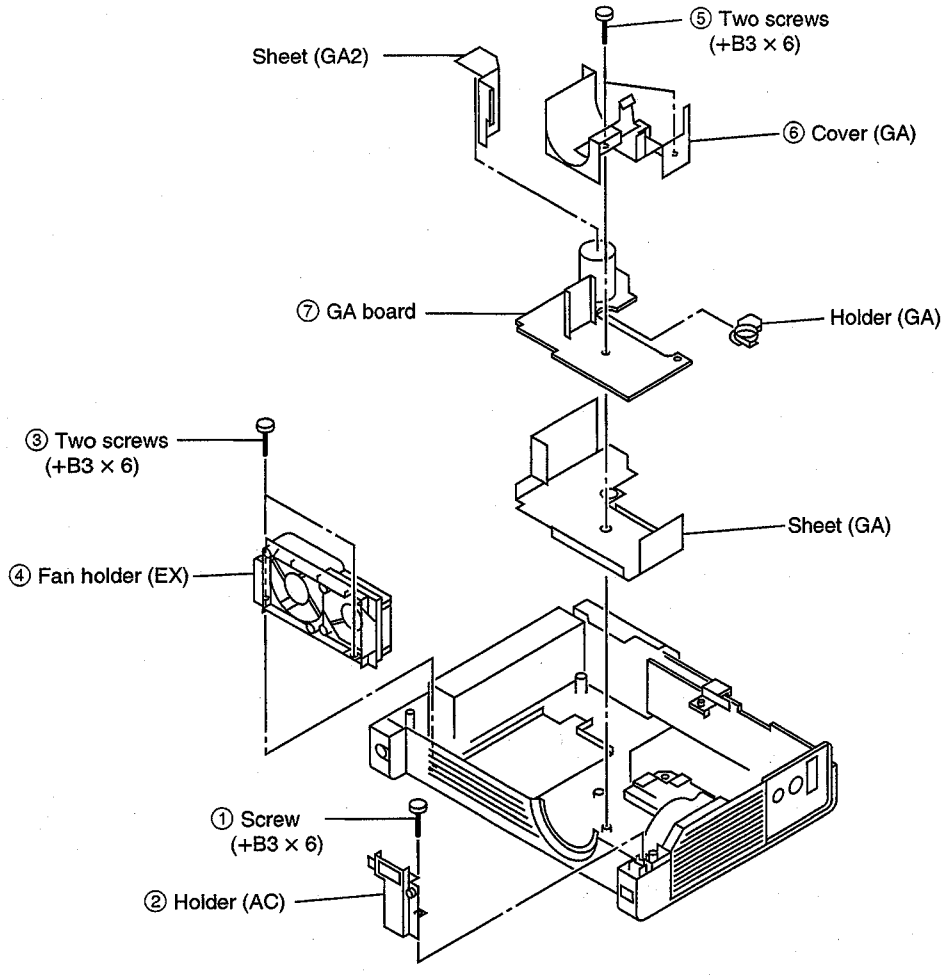

2-2-12. Lamp Power and GC Board Removal

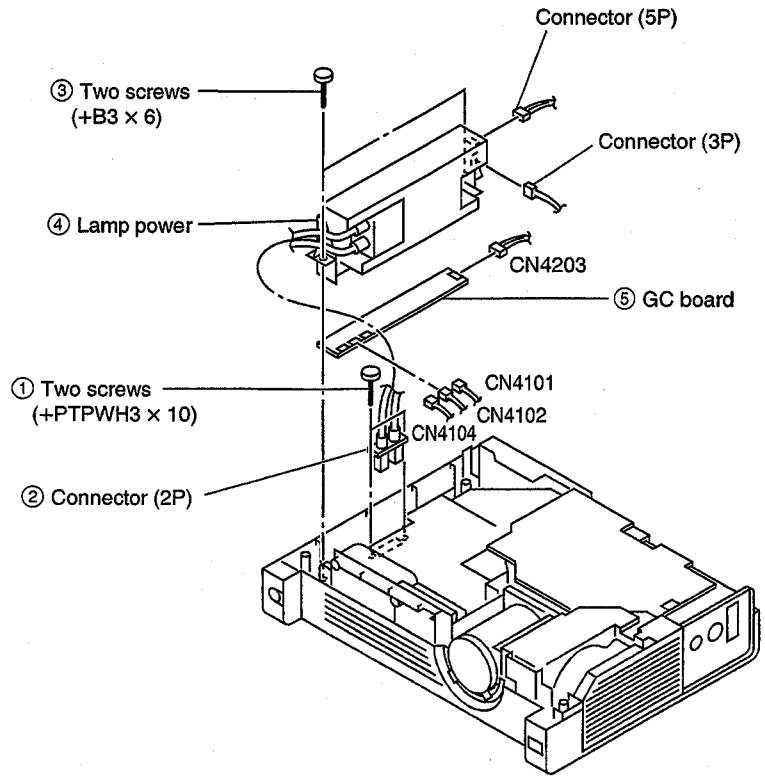

2-2-13. Projection Lens Removal

* Remove the optical block assy. (Refer to Sec.2-2-5.)

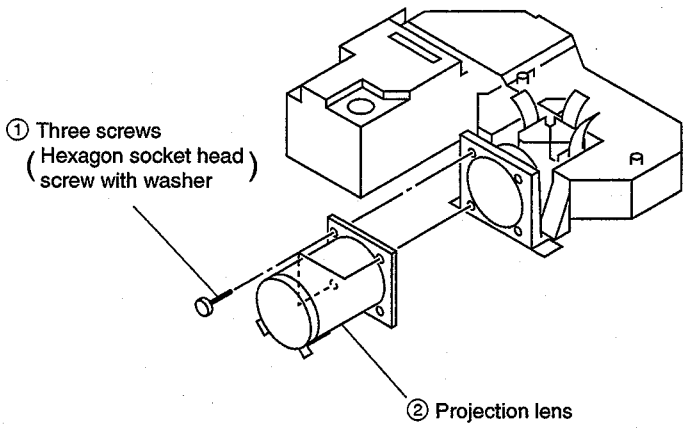

2-2-14. Prism Block Assy and In-polarizer Removal

* Remove the Projection lens. (Refer to Sec.2-2-13.)

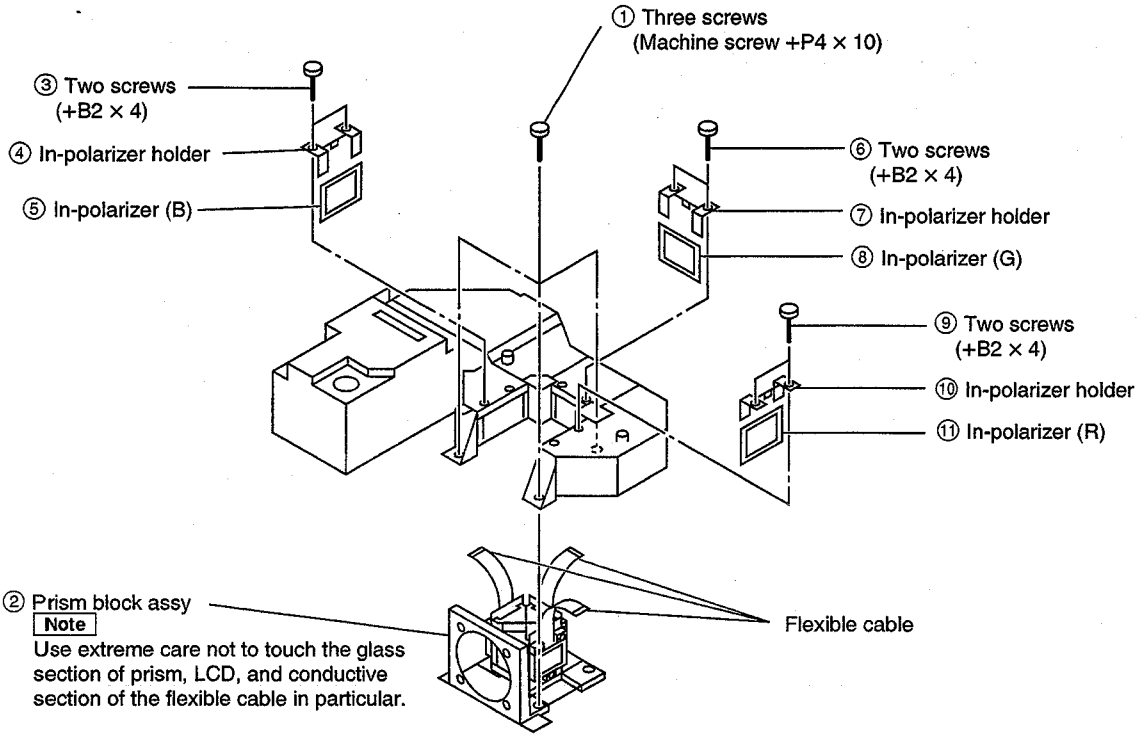

2-2-15. Extension Boards and Extension Cables

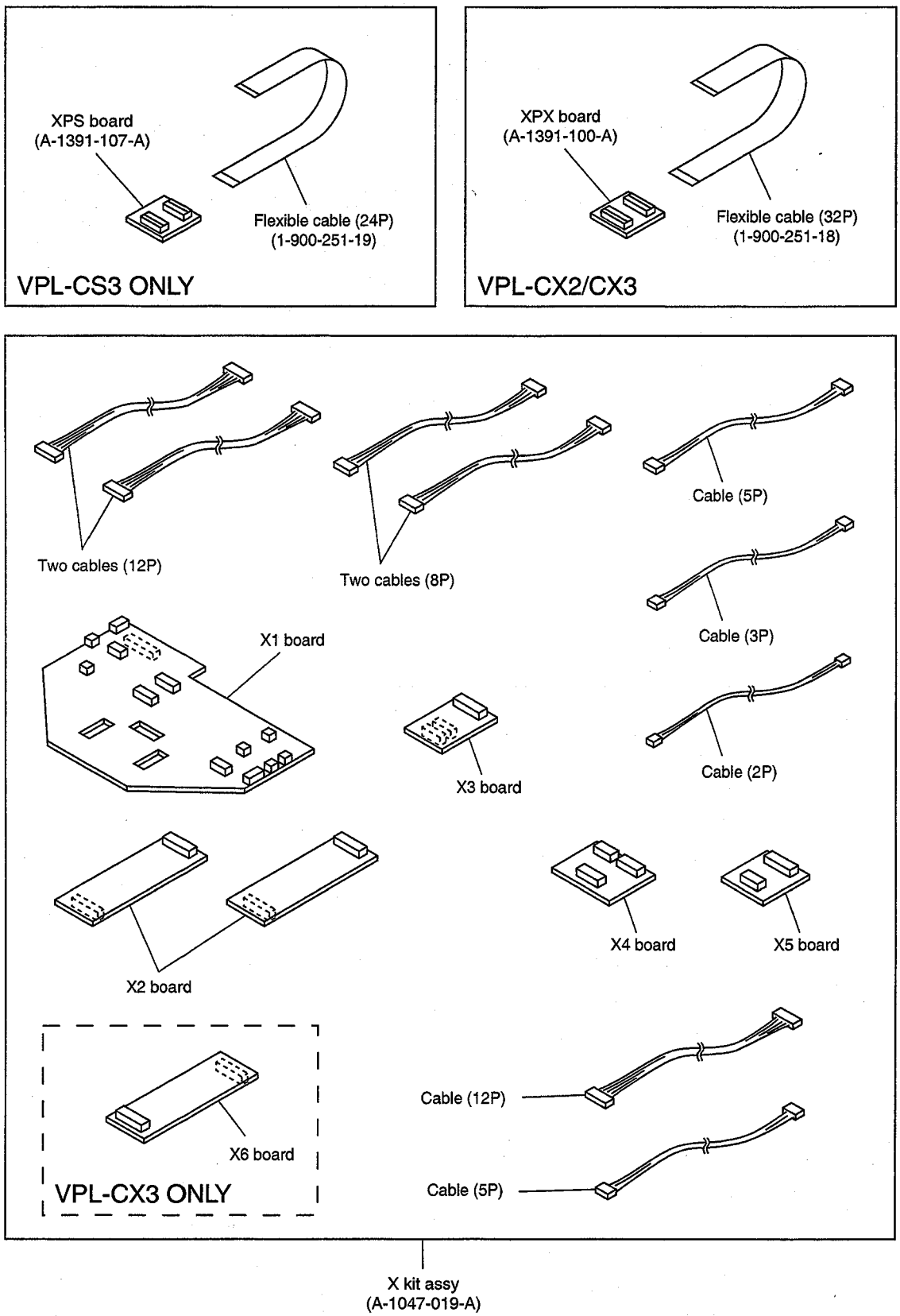

2-2-16. Extension Boards and Extension Cables Connection

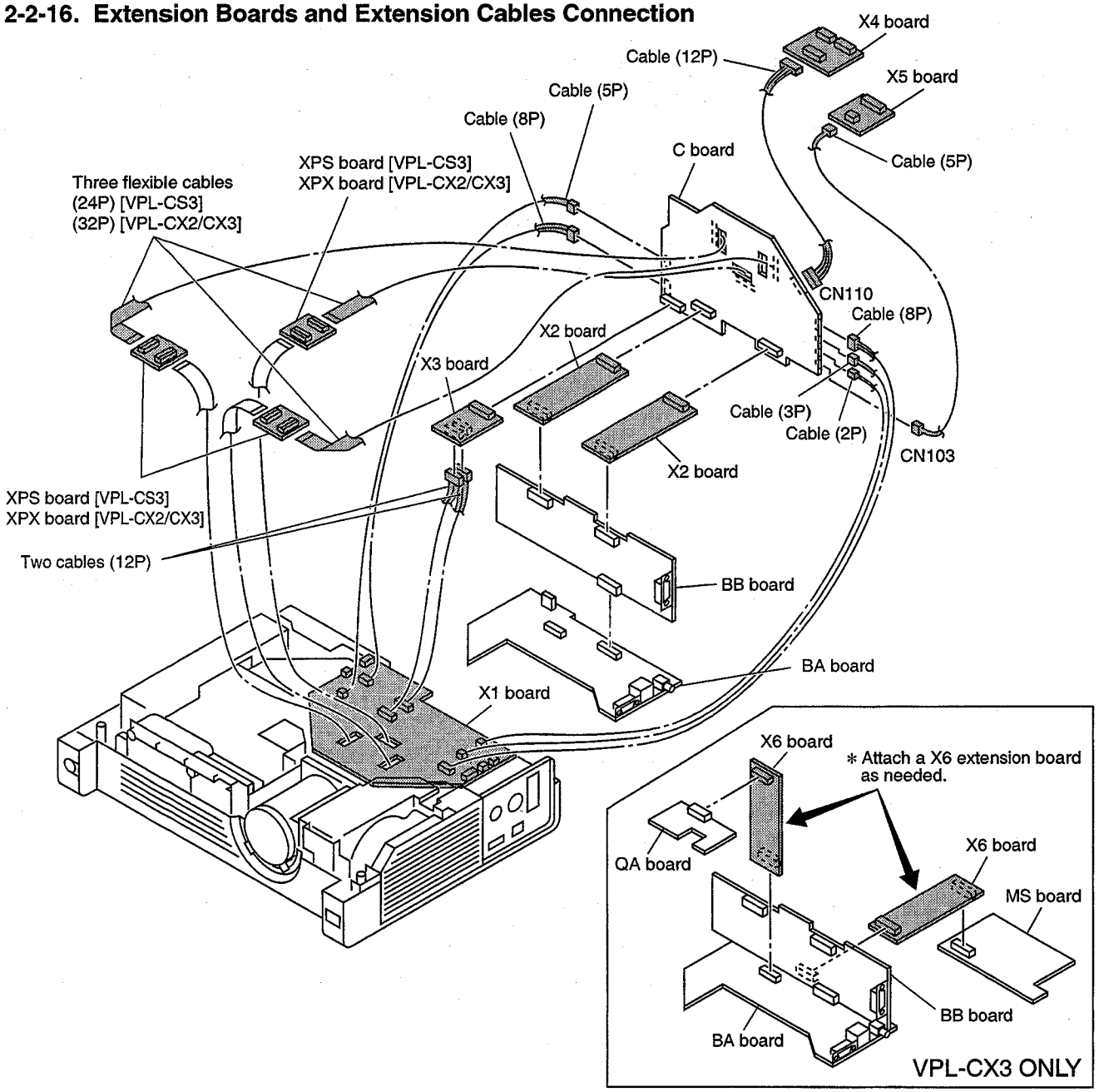

2-2-17. Warning on Power Connection

Use the appropriate rating cord and plug that are applied to local regulations as shown in below tables.

	The United States, Canada	Continental Europe	UK	Australia	Japan
Plug type	YP-11	YP-21	SP-61	B8	YP-13
Female end	YC-13L	YC-13L	YC-13L	C7-2	YC-13L
Cord type	SPT-2	H03VVH2-F	H03VVH2-F	H03VVH2-F	VFF
Rated Voltage & Current	10 A/125 V	2.5 A/250 V	2.5 A/250 V	2.5 A/250 V	7 A/125 V
Safety approval	UL/CSA	VDE	ASTA	SAA	DENTORI

Section 3
Electrical Adjustments

3-1. Preparations

3-1-1. Equipment Required

- Oscilloscope
  Tektronix 2465 or equivalent
  (bandwidth: 350 MHz or more)
- NTSC, PAL, SECAM component signal generator
  Tektronix TG2000 + AVG1 (optional module) + AWVG1 (optional module) or equivalent
- VG (Programmable video signal generator)
  VG814 or equivalent
- Digital voltmeter
  Advantest TR6845 or equivalent
- Luminance meter

Note

Perform the following adjustments at least 5 minutes after turning on the power.

3-1-2. Optical Unit Adjustment

Drive the cooling fan and turn on the lamp.

1) Mirror Adjustment

Set the screen size to 80-inch at the wide-end.

1. Set the unit in green-only.
2. Adjust the blanking sections at the top, bottom, left, and right for minimum by moving the adjusting plate of the G dichromatics mirror.
3. Tighten the adjusting plate fixing screws.
4. Set the unit in cyan.
5. Adjust the blanking sections at the top, bottom, left, and right for minimum by moving the adjusting plate of the RB mirror, and then maximize the intensity of the blue.
6. Tighten the adjusting plate fixing screws.
7. Set the unit in all white.
8. Adjust the blanking sections at the top, bottom, left, and right for minimum by moving the adjusting plate of the RB mirror, and then maximize the intensity of the red.
9. Tighten the adjusting plate fixing screws.
10. Secure the six adjusting plate fixing screws using a torque screwdriver.
    Tightening torque: 8 kgf/cm
11. Make sure that the deviation of the lighting range is within the specific range.

3-1-3. Factory Mode Setting

1. Make sure that the MENU is indicated.
2. Exit the menu.
3. Press the keys in the following order:
   "ENTER" → "ENTER" → "LEFT" → "ENTER"
4. The message "Do you wish to enter into the FACTORY MODE? Yes:↑ No:↓ " will be displayed.
5. Select "Yes:↑".

Note

When leaving the FACTORY MODE, perform item 3. "Do you wish to return to the USER MODE? Yes:↑ No:↓ " will be displayed. Select "Yes:↑".

3-2. V-COM Adjustment

1. Input the green-only 30 IRE all white signal to INPUT-A.
2. Set the CONTRAST to 80 and BRIGHT to 50.
3. Set the screen to G VCOM adjustment of "Device Adjust."
   Adjust the G VCOM so that the vertical line on the screen is minimum.
4. Input the red-only and blue-only 30 IRE all white signal respectively and adjust R VCOM and B VCOM respectively so that the vertical line becomes minimum.
5. Save the value adjusted.

3-3. Adjustment Item Initialize Data

Menu Title	Item Name	Memory Name								
		Set Memory	CH Memory			Status Memory	W/B Memory			
			VIDEO	SVIDEO	INPUT-A		VIDEO HIGH	VIDEO LOW	RGB HIGH	RGB LOW
PICTURE CTRL	CONTRAST		80	80	80					
	BRIGHT		50	50	50					
	COLOR		50	50	50					
	HUE		50	50	50					
	SHARP		50	50	50					
	RGB ENHANCER		–	–	30					
	D.PICTURE		OFF	OFF	OFF					
	GAMMA MODE		–	–	GRAPHICS					
	COLOR TEMP		LOW	LOW	HIGH					
	COLOR SYS		AUTO	AUTO	AUTO					
	VOLUME		50	50	50					
INPUT SETTING	DOT PHASE					15 (*)				
	SIZE H					*				
	SHIFT					*				
	SCAN CONV					ON (*)				
	ASPECT					4 : 3 (*)				
	BLANKING					0 (*)				
SET SETTING	STATUS	ON								
	INPUT-A	COMPUTER								
	AUTO INPUT SEL	OFF								
	LANGUAGE	ENGLISH								
	POWER SAVING	OFF								
INSTALL SETTING	KEYSTONE MEMORY	OFF								
	DIGITAL KEYSTONE	0								
	MENU POSITION	CENTER								
	MENU COLOR	STANDARD								
	SIRCS RECEIVER	FRONT&REAR								
	LAMP TIMER	INDICATION ONLY								
INFORMATION	fH	INDICATION ONLY								
	fV	INDICATION ONLY								
	ROM Ver	INDICATION ONLY								
	OPERATION TIMER	INDICATION ONLY								
	PREVIOUS LAMP TIMER	INDICATION ONLY								

* : "DOT PHASE, SIZE H, SHIFT H/V, SCAN CONV, ASPECT and BLANKING" in the "INPUT SETTING" menu have an initial value respectively in accordance with the input signal (PRESET MEMORY No.).

Note : There are nonadjustable items in accordance with the input signal.

Menu Title	Item Name	Memory Name								
		Set Memory	CH Memory			Status Memory	W/B Memory			
			VIDEO	S VIDEO	INPUT-A		VIDEO HIGH	VIDEO LOW	RGB HIGH	RGB LOW
W/B ADJUST	GAIN R						170	175	170	175
	GAIN G						170	165	170	165
	GAIN B						170	160	170	160
	BIAS R						80	80	80	80
	BIAS G						80	80	80	80
	BIAS B						80	80	80	80

Note : There are nonadjustable items in accordance with the input signal.

Device Name	Item Name	Memory Name					Remarks
		Set Memory	Chroma Memory				
			NTSC 3.58/ NTSC 4.43/ B&W 60 Hz	PAL/PAL-M/ PAL-N/SECAM/ B&W 50 Hz	VIDEO-GBR	COMPONENT	
RGB MTRX/	CONTRAST	15					
	R DRIVE		9	9	9	9	Fixed Value
	G DRIVE		9	9	9	9	Fixed Value
	B DRIVE		9	9	9	9	Fixed Value
	SUB BRT	52					Fixed Value
	YUV CON		5	6	6	6	
	YUV COL		12	12	12	12	
	SUB HUE		8	8	8	8	
	CTI LVL		2	2	1	1	Fixed Value
	R-Y/R		12	11	11	11	
	R-Y/B		14	13	14	14	
	G-Y/R		8	7	7	7	
	G-Y/B		6	6	5	5	
	SUB SHP		2	2	3	3	Fixed Value
	SHPFO		2	2	2	2	Fixed Value
	PRE OVER		0	0	0	0	Fixed Value
	DMIC PIC	3					Fixed Value
	LTI LVL		1	1	1	1	Fixed Value
D.COM/	VENH	2					Fixed Value

Note : There are nonadjustable items in accordance with the input signal.

Device Name	Item Name	Memory Name						Remarks
		Set Memory		Chroma Memory				
		VPL-CS3	VPL-CX2/CX3	NTSC 3.58/ NTSC 4.43/ B&W 60 Hz	PAL/PAL-M/ PAL-N/SECAM/ B&W 50 Hz	VIDEO-GBR	COMPONENT	
CHROMA/	SHP GAIN			11	11	11	11	Fixed Value
	SHP EQ			0	0	0	0	Fixed Value
	SHP FO			2	2	2	2	Fixed Value
	Y-OUT LVL	17						
	C-OUT LVL	9						
	Y-DL	4						Fixed Value
	S B-Y ADJ	7						Fixed Value
	S R-Y ADJ	7						Fixed Value
	S-INHBT	0						Fixed Value
	S-ID	0						Fixed Value
	S GP	0						Fixed Value
	S V-ID	0						Fixed Value
	BELL FO	0						Fixed Value
	HPF	0						Fixed Value
P.DRV/	OFFSET R (E)	168						Fixed Value
	OFFSET (GE)	168						Fixed Value
	OFFSET B (E)	168						Fixed Value
	VCOM R	80						
	VCOM G	80						
	VCOM B	80						
	SIG CEN	155						Fixed Value
	CALIB	138						Fixed Value
	INV CONT	1						Fixed Value
	SID LVL	90	206					Fixed Value
	PRG LVL	200	86					Fixed Value
SH/	SH1	7	5					Fixed Value
	SH2 R	220	212					Fixed Value
	SH2 (G)	220	210					Fixed Value
	SH2 B	220	212					Fixed Value
VAMP/	CONT (E)	168						
	SUB CON R (E)	128						
	SUB CON G (E)	128						Fixed Value
	SUB CON B (E)	128						
	BRT (E)	203						Fixed Value

Note : There are nonadjustable items in accordance with the input signal.

Device Name	Item Name	Memory Name						Remarks
		Set Memory		Chroma Memory				
		VPL-CS3	VPL-CX2/CX3	NTSC 3.58/ NTSC 4.43/ B&W 60 Hz	PAL/PAL-M/ PAL-N/SECAM/ B&W 50 Hz	VIDEO-GBR	COMPONENT	
3D GAMMA/	SUB CONT	0						Fixed Value
	SUB BRT	0						Fixed Value
	R OSD LVL	31						Fixed Value
	G OSD LVL	31						Fixed Value
	B OSD LVL	31						Fixed Value
	THROUGH	0						Fixed Value
	SW	1						Fixed Value
	APC THRES	25						Fixed Value
	APC LIMIT	32						Fixed Value
OTHER/	H START	104	144					Fixed Value
	V START	22						Fixed Value
	H POSITION	23	13					Fixed Value
	TEMP LAMP	Non adjustable						Fixed Value
	TEMP PANEL	Non adjustable						Fixed Value
	LAMP FAN 1	Non adjustable						Fixed Value
	PANEL FAN 1	Non adjustable						Fixed Value
	LAMP FAN 2	Non adjustable						Fixed Value
	PANEL FAN 2	Non adjustable						Fixed Value
	SYNCHRONOUS	1						Fixed Value
GAMMA		Factory default setting value						

Note : There are nonadjustable items in accordance with the input signal.

3-4. Service Knowhow

3-4-1. After Replacing the Prism Block

1. Perform Section "3-2. V-COM Adjustment."
2. Perform the Gamma data writing of the Prism Block. (For VPL-CX2 and VPL-CX3)

   Note

   In VPL-CS3, prizum does not has a floppy disc of the data. In VPL-CX2 and VPL-CX3, prizum has a floppy disc of the data.
3. Perform Section "3-5. White Balance Adjustment on Servicing."

3-4-2. After Replacing the Board

- Refer to the cross table shown on right.
- There are no need to perform the adjustment when the board other than the BA board or C board had been replaced.

1) When Replacing the BA Board

When the data before replacement can be read properly

1. Make a note of the data before replacement. After replacement, write the data into the new board with service mode.
2. If the white balance is extremely deteriorated, perform the white balance adjustment (Refer to Section 3-5.).

When the data before replacement cannot be read

1. Perform Section "3-2. V-COM Adjustment."
2. Perform Section "3-5. White Balance Adjustment on Servicing."

2) When Replacing the C Board

1. Before replacement, unsolder the IC208 from the replaced C board and then mount it to the new board.
2. Perform Section "3-2. V-COM Adjustment."
3. If the white balance is extremely deteriorated, perform the white balance adjustment (Refer to Section 3-5.).

3) When Replacing the Other Board

There are no need to perform the adjustment.

Cross Table of Board Replacement

Device Name	Item Name	Board Name	
		BA	C
P.DRV	VCOM (R)	*	O
	VCOM (G)	*	O
	VCOM (B)	*	O
VAMP	CONT (E)	*	O
	SUB CON R (E)	*	O
	SUB CON B (E)	*	O
W/B ADJUST			
INPUT-A HIGH	GAIN R	*	O
	GAIN G	*	O
	GAIN B	*	O
	BIAS R	*	O
	BIAS G	*	O
	BIAS B	*	O
INPUT-A LOW	GAIN R	*	O
	GAIN G	*	O
	GAIN B	*	O
	BIAS R	*	O
	BIAS G	*	O
	BIAS B	*	O
VIDEO HIGH	GAIN R	*	O
	GAIN G	*	O
	GAIN B	*	O
	BIAS R	*	O
	BIAS G	*	O
	BIAS B	*	O
VIDEO LOW	GAIN R	*	O
	GAIN G	*	O
	GAIN B	*	O
	BIAS R	*	O
	BIAS G	*	O
	BIAS B	*	O

* : When down the data before replacement, and then write in the data after the board replacement.

O : Need adjustment

Value : See description.

3-5. White Balance Adjustment on Servicing

3-5-1. Signal Level Adjustment

1. Input the 95 IRE and 100 IRE signals to INPUT-A.
2. Warm up the unit at least 10 minutes.

   Then enter the Service mode.

   Press the keys in the following order.
   "ENTER"→"ENTER"→"↑"→"↓"→"ENTER"
   The message "Do you wish to enter into the SERVICE MODE? Yes:↑ No:↓ " will be displayed.
   Select "Yes:↑".

   Note

   When leaving the SERVICE MODE, perform the key operations of item 2, "Do you wish to return to the USER MODE? Yes:↑ No:↓ " will be displayed. Select "Yes:↑".
3. Set the unit in G-only mode.
4. Enter the P.DRV on the MENU screen by the DEV. ADJ.
5. Discriminate the 95 IRE and 100 IRE by the V-AMP/CONT (E) controls of the P.DRV.
6. Set the unit in Red-only mode.
7. Discriminate the 95 IRE and 100 IRE by the V-AMP/SUB CON R (E) controls of the P.DRV.
8. Set the unit in Blue-only mode.
9. Discriminate the 95 IRE and 100 IRE by the V-AMP/SUB CON B (E) controls of the P.DRV.

3-5-2. White Balance Adjustment

1) HIGH Mode of INPUT-A

Input the 10 STEP signal to INPUT-A, and observe the chromaticity of each luminance.
When varying the chromaticity of each luminance, perform the following adjustments.

1. Input the 100 IRE FLAT FIELD signal to INPUT-A.
2. Measure the chromaticity (x, y).
3. Input the 80 IRE FLAT FIELD signal to INPUT-A.
4. Adjust the chromaticity (x, y) to the values measured in step 2. by the VAMP/SUB CON R (E) and B (E) of the P. DRV.
5. Change the INPUT signal to the 30 IRE.
6. Adjust the chromaticity (x, y) to the values measured in step 2. by the HIGH mode BIAS R, B of W/B.
7. Change the INPUT signal to the 80 IRE.
8. Adjust the chromaticity (x, y) to the values measured in step 2. by the GAIN R, B.
9. Repeat above steps 5. to 8. until the chromaticity become the following values.
   x ± 0.002, y ± 0.004 (The x and y are the values measured in step 2.)

2) LOW Mode of INPUT-A

1. Input the 80 IRE FLAT FIELD signal to INPUT-A.
2. Set the GAIN G to HIGH mode value at "−25" with the LOW mode of the W/B. Set GAIN to HIGH mode value at "+15".
3. Set the GAIN B that is equal to HIGH mode value.
4. Set the BIAS R, G and B that are equal to HIGH mode values.
5. Measure the chromaticity (x, y).
6. Input the 30 IRE FLAT FIELD signal to INPUT-A.
7. Adjust the chromaticity (x, y) to the values measured in step 5. by the BIAS G and B of the LOW mode of the W/B.
8. Input the 80 IRE signal to INPUT-A.
9. Adjust the chromaticity (x, y) to the values measured in step 5. by GAIN G and B.
10. Repeat above steps 6. to 9. until the chromaticity become the following values.
    x ± 0.002, y ± 0.004 (The x and y are the values measured in step 5.)

3) HIGH Mode of VIDEO

1. Input the VIDEO signal of NTSC or PAL.
2. Set the GAIN G to HIGH mode value at "−15" with the INPUT-A HIGH mode of the W/B.
   Set the BIAS G to INPUT-A HIGH mode at "−5".
3. Set the GAIN R, B and BIAS R, B that are equal to INPUT-A HIGH mode values.

4) LOW Mode of VIDEO

1. Input the VIDEO signal of NTSC or PAL.
2. Set the GAIN G to LOW mode value at "−15" with the INPUT-A LOW mode of the W/B.
   Set the BIAS G to INPUT-A LOW mode at "−5".
3. Set the GAIN R, B and BIAS R, B that are equal to INPUT-A LOW mode values.

3-6. Memory

Memory structure consists of the following five memory blocks.

1. Set memory
2. Status memory
3. Channel memory
4. Chroma memory
5. W/B memory

CPU internal ROM : 256 kbyte Flash Memory
CPU internal ROM : 16 kbyte
External NVM memory : 8 kbyte EEPROM

Gamma mode functions are actualized by offsetting the output values to the Contrast and Brightness devices.
When the power plug is connected to the power line (Standby status), all data inside the internal ROM are written into the NVM (Nonvolatile Memory). When the power is turned to on, required data for the current picture, such as status memory data, etc., are selected, and they are written into the internal RAM.
When adjustment is carried out, adjustment data are written into the NVM automatically (items on the user mode) or by the trigger of memory operation (items on the service mode and factory mode), then stored them.
Adjustable items (W/B and Device Adjust) of the service mode and factory mode are memorized into the NVM by the memory operation. At the same time, the factory preset (adjusted) data are all eliminated from the memory.

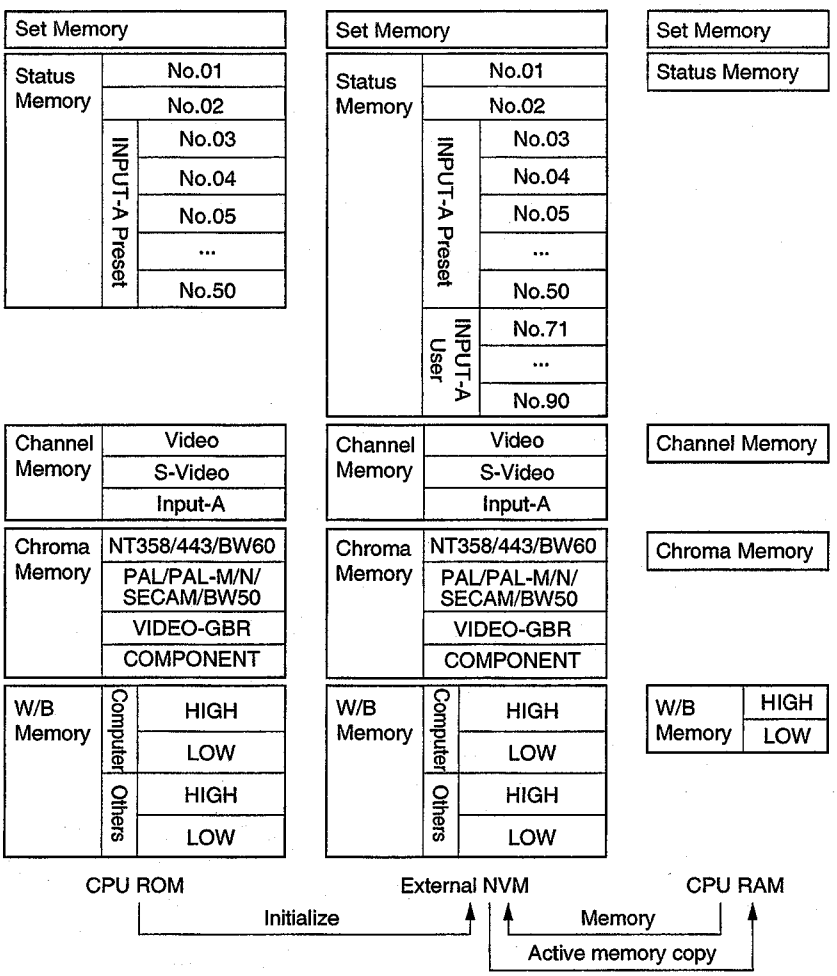

Section 4
Semiconductors

24LC21AT/SN
BA10393F
BA10393F-E2
IRMF-A0T-QTP
LT1374IS8
M24C64
M24C64-WMN6T(A)
M24C64WMN6T
MAX890LESA-TG068
MM1096AFF
NJM062M
NJM2073M(TE2)
ST24FC21M6TR
TA75W393FU
TC7W04FU
TC7W14FU(TE12R)
TC7W32FU
TC7W32FU(TE12R)
TC7WH74FK
TC7WH74FK(TE85R)
TC7WH123FU
TC7WH123FU(TE12R)
TC7WH74FU(TE12R)
TL431BCDR2

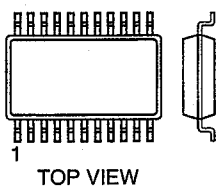

8PIN SOP

74HC148AF(EL)
CXA1875AM
CXA1875AM-T4
TC74HC148AF(EL)

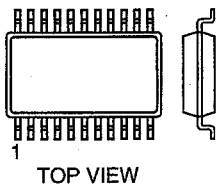

16PIN SOP

74VHC02MTCX
74VHC125MTCX
BA10339FV
BA10339FV-E2
TC74LCX125FT
TC74LCX125FT(EL)

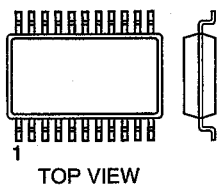

14PIN SOP

74VHC240MTCX
74VHC541MTCX
74VHCT541MTCX
CXA1846BN-T4
MK1714-01
MK1714-01RT
M52347FP-TE

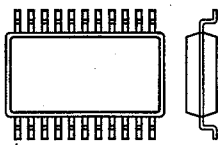

20PIN SOP

AD9884AKS-100
AD9884AKS-140

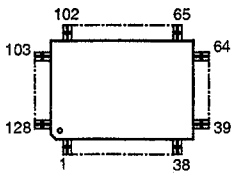

ADV7123KST140

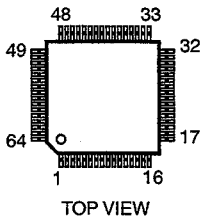

BA033F-E2
BA033FP-E2
BA05FP-E2
L88M05T-FA
L88M05T-FA-TL
LP2985IM5X-3.3

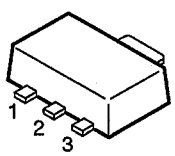

BA12FP-E2

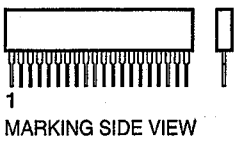

CXA2101AQ
CXA2101AQ-TL

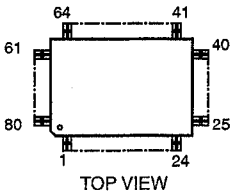

CXA2123AQ
CXA2123AQ-T6

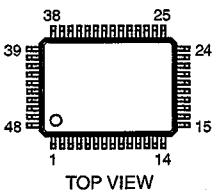

CXA3512R-T6

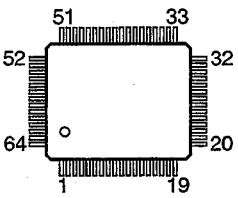

CXD2064Q-T6
CXD2064Q(T6)

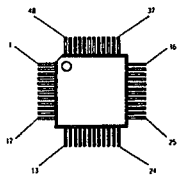

CXD9607GB

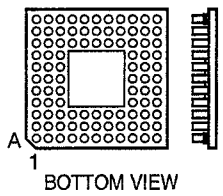

144PIN PGA

HD64F2633
HD64F2633TE

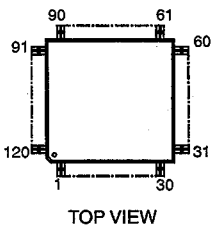

HM62W16256BLT5
HM62W16256BLT5SLZ
IDT71V016S20PHAU-TL

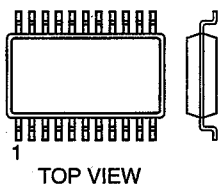

44PIN SOP

ISPLSI2032VE-110
ISPLSI2032VE-110LT44/1714A
MB86189
MB86189PFV-G-BND-ER

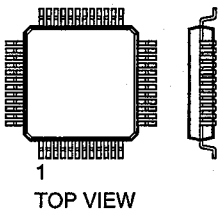

48PIN QFP

LM4041DIM3-1.2
LM4041DIM3-1.2(T&R)

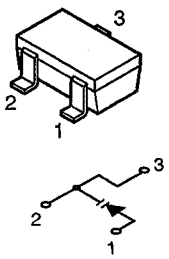

LM7131BCM5X

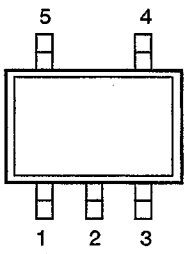

LMC7101BI
TC75S56F
TC75S56F(TE85R)
TC7S00FU(TE85R)
TC7S04FU
TC7S04FU(TE85R)
TC7S04FU-TE85R
TC7S08FU
TC7S08FU(TE85R)
TC7SET08FU(TE85)
TC7SET08FU(TE85L)

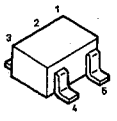

M52749FP
M52749FP-TP

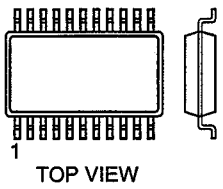

42PIN SOP

MCZ3001D

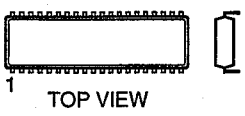

18PIN DIP

MZ1540

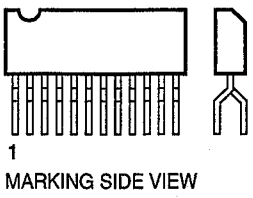

PW164-10RS

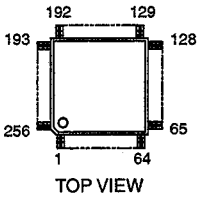

SST39VF800A-70
SST39VF800A-70-1714A

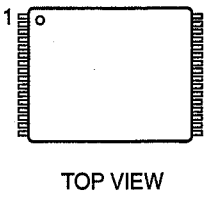

48PIN

M52758FP

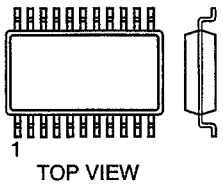

36PIN SOP

MD1320N
MD1320N-TA

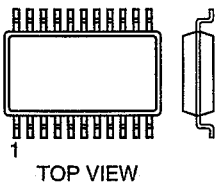

32PIN SOP

PC123F2
PC123FY2

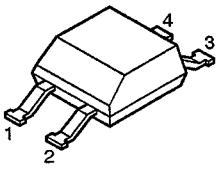

RCV4-A1T-OTP-25
ST72T631L4M1-102

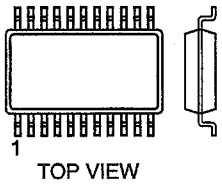

34PIN SOP

TA78M09F(TE16L)

M62392FP

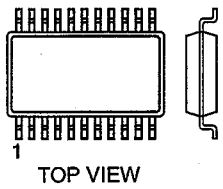

24PIN SOP

MD2305E

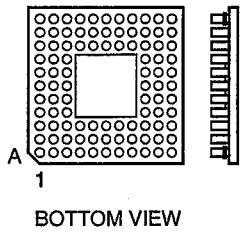

280PIN PGA

PQ20VZ1U

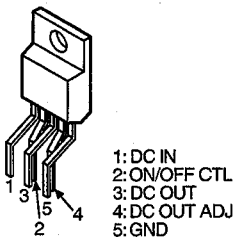

RS-140-T

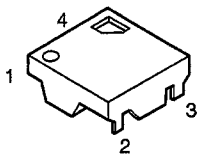

TK11900MTL

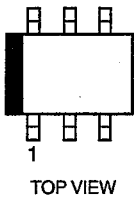

MBM29LV400TC-70P
MBM29LV400TC-70PFTN
-SX1713

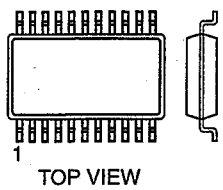

48PIN SOP

MT48LC8M16A2TG75
MT48LC8M16A2TG-75TR

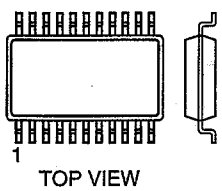

54PIN TSOP

PQ2TZ15U

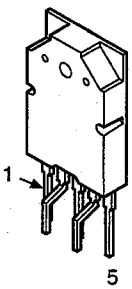

S-80828ANNP
S-80828ANNP-EDR-T2
S-80842ANNP
S-80842ANNP-ED6
S-80842ANNP-ED6-T2

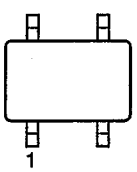

UPD72012GB-003-3
UPD72012GB-003-3B4

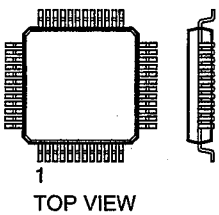

44PIN QFP

2SA1037AK
2SA1037AK-T146-R
2SA1162
2SA1162-G
2SA1162-YG-TE85L
2SA1462
2SA1611
2SA1611-M5M6
2SA1611-T1-M5M6
2SA1611T1-M5M6
2SC2712
2SC2712-YG
2SC3326N
2SC3326N-A
DTA144EUA
DTA144EUA-T106
DTC114EU
DTC114EUA-T106
DTC144EKA
DTC144EUA
DTC144EUA-T106

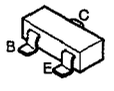

2SB798

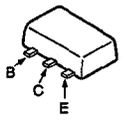

2SJ530S-TL

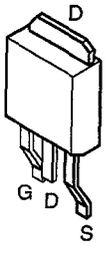

2SK2876
2SK2876-01MR-F119

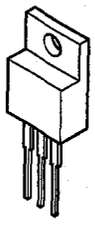

HN1B01FU-T
HN1B01FU-TE85R
HN1C01FU-TE85R

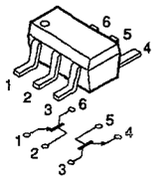

XP4501-TXE

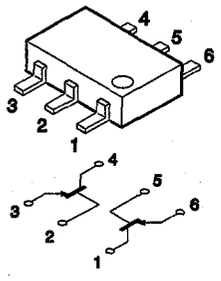

Diode

1SS226
MA157-TX

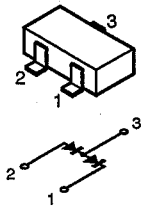

DF10SC4M
DF10SC6

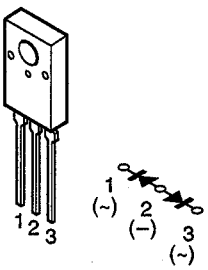

FA1113F-Y641-TR

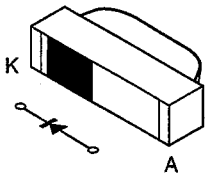

RM11C
RM11C(RECTI)

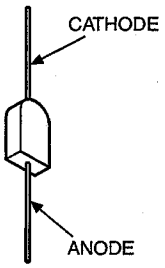

1SS355
1SS355TE-17
D2FS6-TA
M1FL20U
M1FL20U-4063
MA111-(K8).S0
MA111-TX
RB501V-40TE-17
RD5.6SB
RD5.6SB-T1
RD9.1SB2
RD9.1SB2-T1
UDZ-TE-17-3.9B

D1FS4A-TA

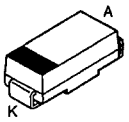

GP1U28Y

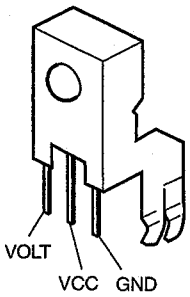

SEC1901C
SEC2422C

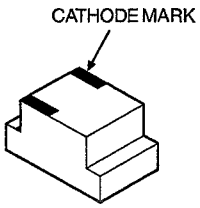

BZA456A

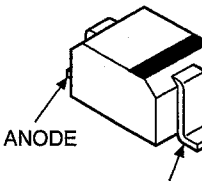

D6SB80

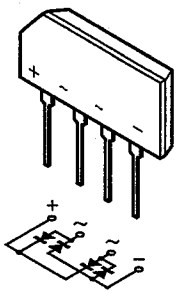

HN1D03FU-TE85
HN1D03FU-TE85L
HN1D03FU-TE85R
HN1D03FU-TE86

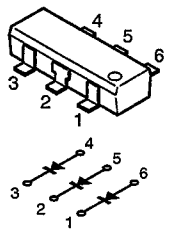

UF4005PKG23

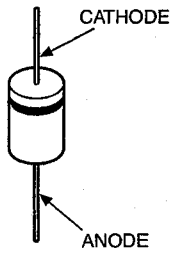

DAN202K
DAN202K-T-146

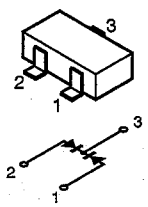

RD16M-B2
RD18M-B1
RD33M-B
RD33M-T18
RD6.8M
RD6.8M-B1
RD6.8M-T1B1

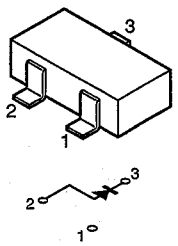

UMZ6.8M
UMZ6.8M-T106

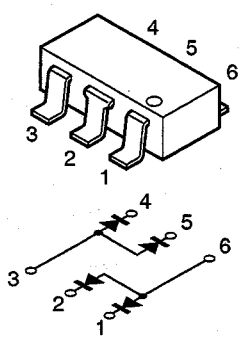

Section 5
Spare Parts

5-1. Notes on Repair Parts

1. Safety Related Components Warning

WARNING

Components marked ⚠ are critical to safe operation. Therefore, specified parts should be used in the case of replacement.

WARNHINWEIS

Les composants identifiés par la marque ⚠ sont critiques pour la sécurité.
Ne les remplacer que par une pièce portant le numéro spécifié.

2. Standardization of Parts

Some repair parts supplied by Sony differ from those used for the unit. These are because of parts commonality and improvement.
Parts List has the present standardized repair parts.

3. Stock of Parts

Parts marked with "o" at SP (Supply Code) column of the Spare Parts list may not be stocked. Therefore, the delivery date will be delayed.
Items with no part number and no description are not stocked because they are seldom required for routine service.

4. Units for Capacitors, Inductors and Resistors

The following units are assumed in Schematic Diagrams, Electrical Parts List and Exploded Views unless otherwise specified.

Capacitors	: μF
Inductors	: μH
Resistors	: Ω

5-2. Exploded Views

5-2-1. Cover

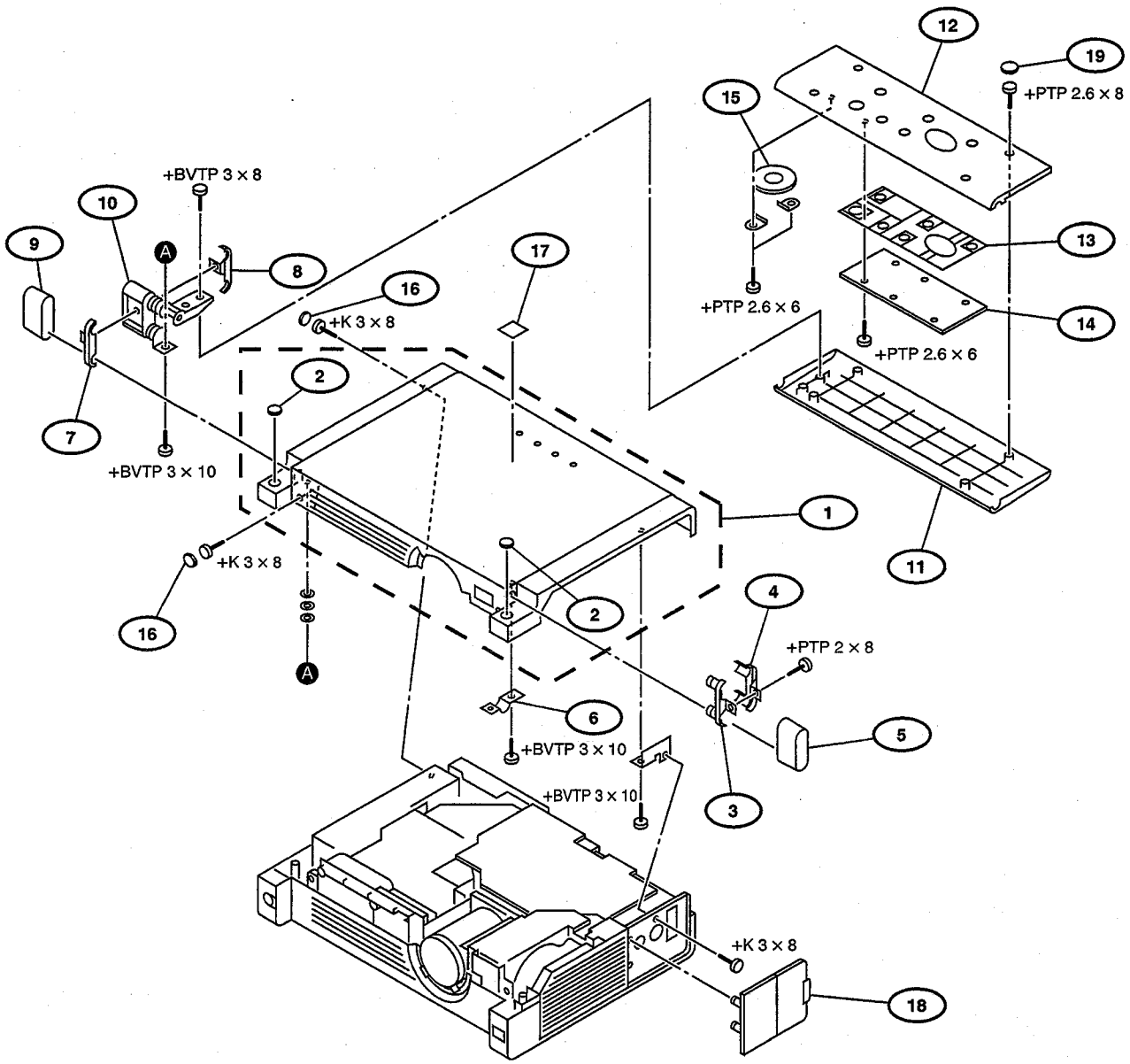

No.	Part No.	SP	Description
1	X-4038-904-1	s	HOOD ASSY
2	4-082-737-01	s	RUBBER, BLIND
3	4-082-821-01	s	COVER (RA), ARM SIDE
4	4-082-820-01	s	COVER (RA), ARM SIDE
5	4-082-796-01	s	COVER (R), ARM
6	4-082-800-01	o	HOLDER, ARM
7	4-082-799-01	s	COVER (LB), ARM SIDE
8	4-082-798-01	s	COVER (LA), ARM SIDE
9	4-082-797-01	s	COVER (L), ARM
10	4-082-818-01	s	HINGE UNIT
11	4-082-829-01	s	COVER (A), FRONT
12	4-082-828-02	s	COVER (B), FRONT
13	4-082-819-01	s	BUTTON
14	A-1375-219-A	s	MOUNTED CIRCUIT BOARD, H
15	1-544-798-11	s	SPEAKER (2.8 CM)

No.	Part No.	SP	Description
16	4-082-737-01	s	RUBBER, BLIND
17	4-082-743-01	s	EMBLEM (CS3) [VPL-CS3]
	4-083-284-01	s	EMBLEM (CX2) [VPL-CX2]
	4-083-286-01	s	EMBLEM (CX3) [VPL-CX3]
18	4-082-813-01	s	COVER, CONNECTOR
19	4-082-737-11	s	RUBBER, BLIND
Screws			
	7-685-646-79	s	+BVTP 3x8
	7-685-647-79	s	+BVTP 3x10
	7-685-133-19	s	+PTP 2.6x6
	7-685-134-19	s	+PTP 2.6x8
	7-685-105-19	s	+PTP 2x8
	7-682-248-04	s	+K 3x8

5-2-2. Chassis

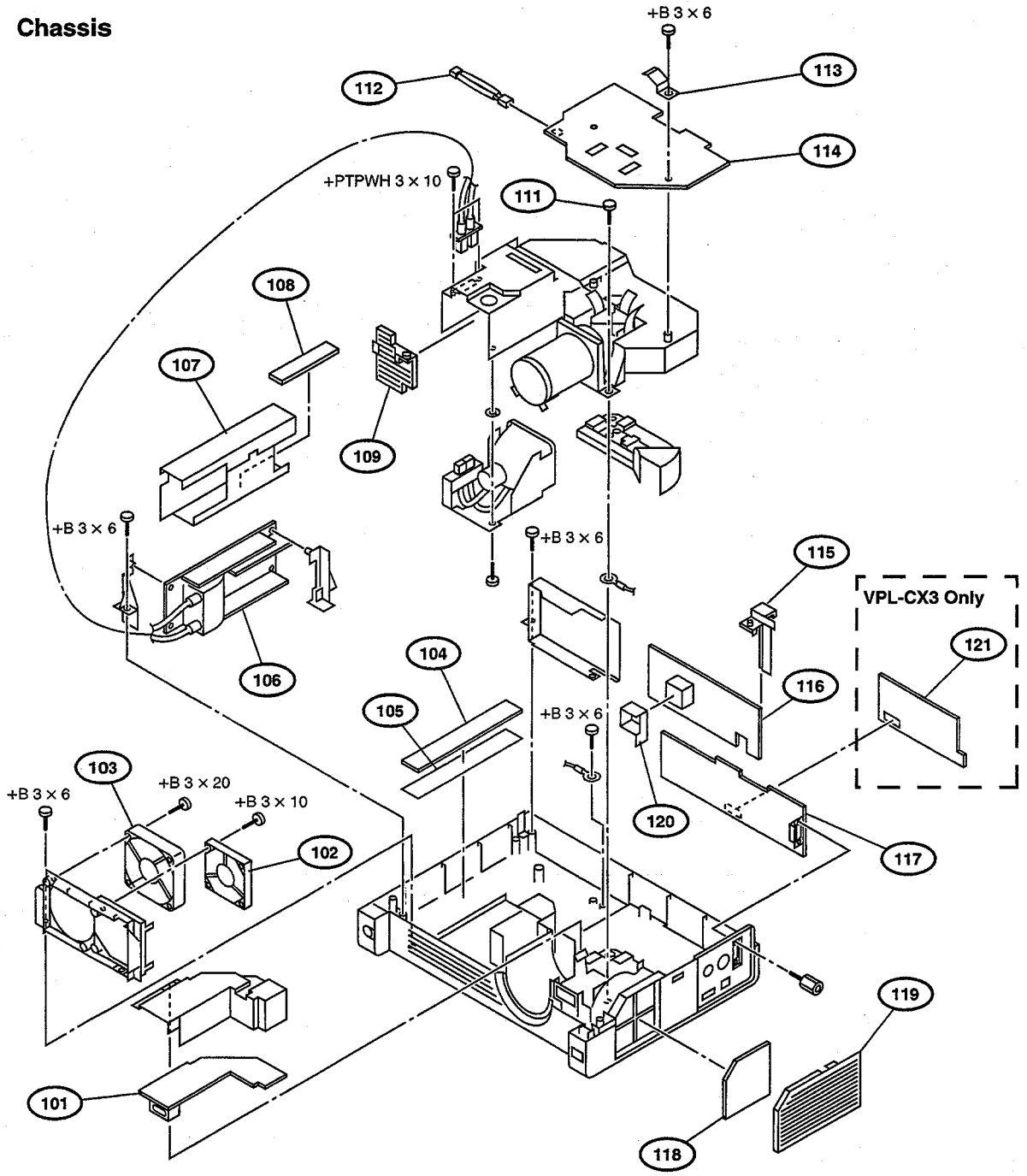

No.	Part No.	SP	Description
101	A-1245-603-A	s	MOUNTED CIRCUIT BOARD, F
102	1-763-693-11	s	FAN, DC
103	1-763-694-11	s	FAN, DC
104	A-1316-569-A	s	MOUNTED CIRCUIT BOARD, GC
105	4-082-742-01	s	SHEET (GC)
106	1-468-600-11	s	POWER BLOCK (LAMP)
107	4-082-815-02	o	SHEET (LPS)
108	4-082-740-01	s	SHEET (A), HEAT
109	4-082-804-01	o	PLATE, LIGHT INTERCEPTION
111	4-083-075-01	s	SCREW, MACHINE (+) P M4 x 10
112 ⚠	1-900-222-47	s	CONNECTOR ASSY, FUSE 2P
113	4-082-741-01	s	SPRING (C), GROUND
114	A-1335-140-A	s	MOUNTED CIRCUIT BOARD, C [VPL-CS3]
	A-1335-145-A	s	MOUNTED CIRCUIT BOARD, C [VPL-CX2/CX3]
115	4-082-803-01	s	HOLDER (MS)

No.	Part No.	SP	Description
116	A-1316-568-A	s	MOUNTED CIRCUIT BOARD, GB
117	A-1136-175-A	s	MOUNTED CIRCUIT BOARD, BB [VPL-CS3]
	A-1136-212-A	s	MOUNTED CIRCUIT BOARD, BB [VPL-CX2]
	A-1136-221-A	s	MOUNTED CIRCUIT BOARD, BB [VPL-CX3]
118	4-082-730-01	s	FILTER
119	4-082-817-01	s	COVER, FILTER
120	4-083-244-01	s	SHEET (GB)
121	A-1306-609-A	s	MOUNTED CIRCUIT BOARD, MS [VPL-CX3 ONLY]

Screws

	7-682-553-09	s	+B 3x20
	7-682-547-04	s	+B 3x6
	7-682-549-09	s	+B 3x10
	7-685-903-31	s	+PTPWH 3x10

5-2-3. Base

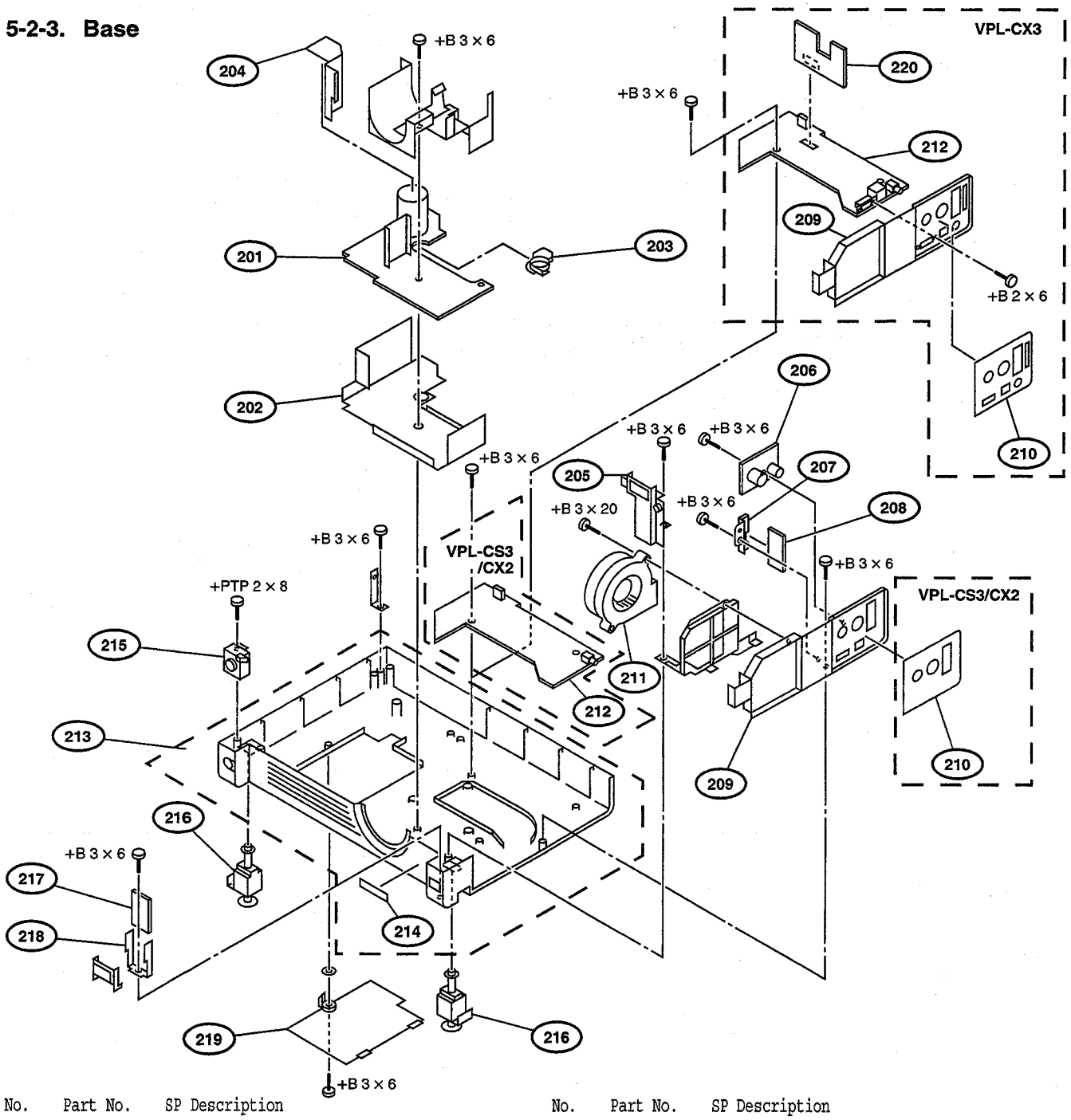

No.	Part No.	SP	Description
201	A-1316-567-A	s	MOUNTED CIRCUIT BOARD, GA
202	4-082-814-02	o	SHEET (GA)
203	4-082-808-01	o	HOLDER (GA)
204	4-082-788-01	s	SHEET (GA2)
205	4-082-805-01	s	HOLDER (AC)
206	A-1275-200-A	s	MOUNTED CIRCUIT BOARD, QB
207	4-082-809-01	o	HOLDER (V)
208	A-1342-599-A	s	MOUNTED CIRCUIT BOARD, V
209	4-081-968-02	o	PANEL, CONNECTOR
210	4-082-812-02	s	LABEL, CONNECTOR [VPL-CS3/CX2]
	4-083-290-01	s	NAME LABEL, CONNECTOR [VPL-CX3]
211	1-763-695-11	s	FAN, DC
212	A-1136-176-A	s	MOUNTED CIRCUIT BOARD, BA [VPL-CS3]
	A-1136-213-A	s	MOUNTED CIRCUIT BOARD, BA [VPL-CX2]
	A-1136-222-A	s	MOUNTED CIRCUIT BOARD, BA [VPL-CX3]
213	X-4038-905-1	s	BASE ASSY

No.	Part No.	SP	Description
214	4-942-568-41	s	EMBLEM (NO.5) SONY
215	4-082-795-01	s	UNIT, OPEN BUTTON
216	4-082-802-01	s	ADJUSTER
217	A-1391-121-A	s	MOUNTED CIRCUIT BOARD, NF
218	4-082-811-01	o	HOLDER (NF)
219	X-4038-903-1	s	LAMP COVER ASSY
220	A-1275-208-A	s	MOUNTED CIRCUIT BOARD, QA [VPL-CX3 ONLY]

Screws

7-682-553-09	+B 3x20	
7-682-547-04	+B 3x6	
7-685-105-19	+PTP 2x8	

5-2-4. Optics 1

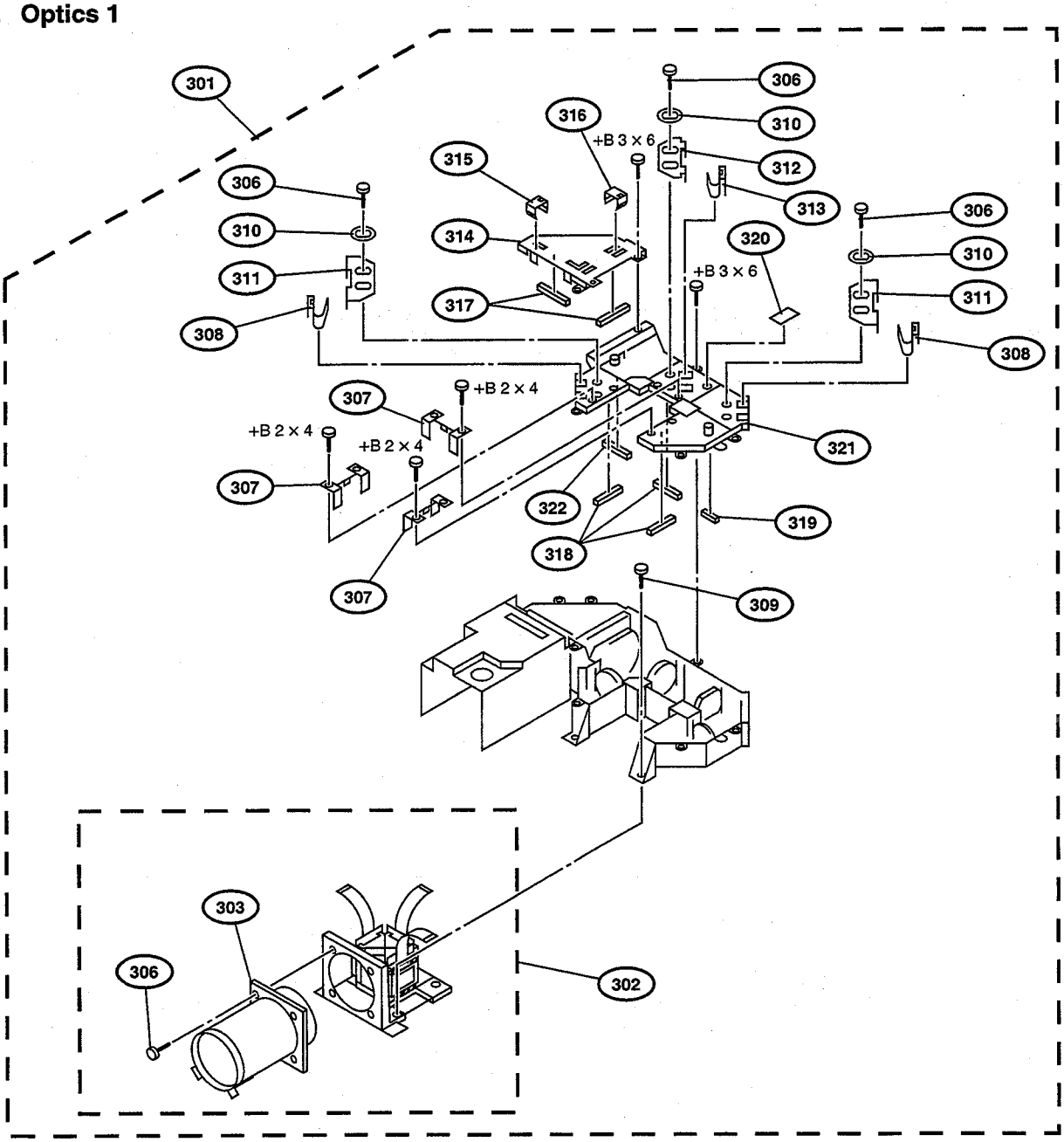

No.	Part No.	SP	Description
301	A-1501-909-A	s	OPTICS BLOCK ASSY [VPL-CS3]
	A-1501-951-A	s	OPTICS BLOCK ASSY [VPL-CX2/CX3]
302	A-1501-910-A	s	PRISM BLOCK ASSY [VPL-CS3]
	A-1485-366-A	s	PRISM BLOCK ASSY [VPL-CX2/CX3]
303	A-1501-908-A	s	PROJECTION LENS [VPL-CS3]
	A-1501-950-A	s	PROJECTION LENS [VPL-CX2/CX3]
306	4-074-474-01	s	SCREW, +BSW M3 x 8
307	4-082-784-01	o	HOLDER, IN-POLARIZER
308	4-074-405-01	o	FASTENER (RB)
309	4-082-759-01	s	SCREW, MACHINE (+) P M4 x 12
310	4-066-174-01	s	STOPPER (OPT), ROTATION
311	4-082-749-01	o	ADJUSTER, RB-MIRROR
312	4-082-750-01	o	ADJUSTMENT, G-MIRROR
313	4-082-748-01	o	FASTENER (G)
314	4-082-824-01	o	COVER (B), UNIT
315	4-082-744-01	o	SPRING (FY-PS)

No.	Part No.	SP	Description
316	4-082-754-01	o	SPRING (UV-FY)
317	4-082-763-01	o	STOPPER, P/S
318	4-082-764-01	o	STOPPER, CH CONDENSER
319	4-082-765-01	o	STOPPER, RELAY LENS-2
320	4-074-425-01	s	TAPE (A), SEAL
321	4-082-826-01	o	COVER (F), UNIT
322	4-083-434-01	o	STOPPER, UV
Screws			
	7-621-772-10	s	+B 2x4
	7-682-547-04	s	+B 3x6

5-2-5. Optics 2

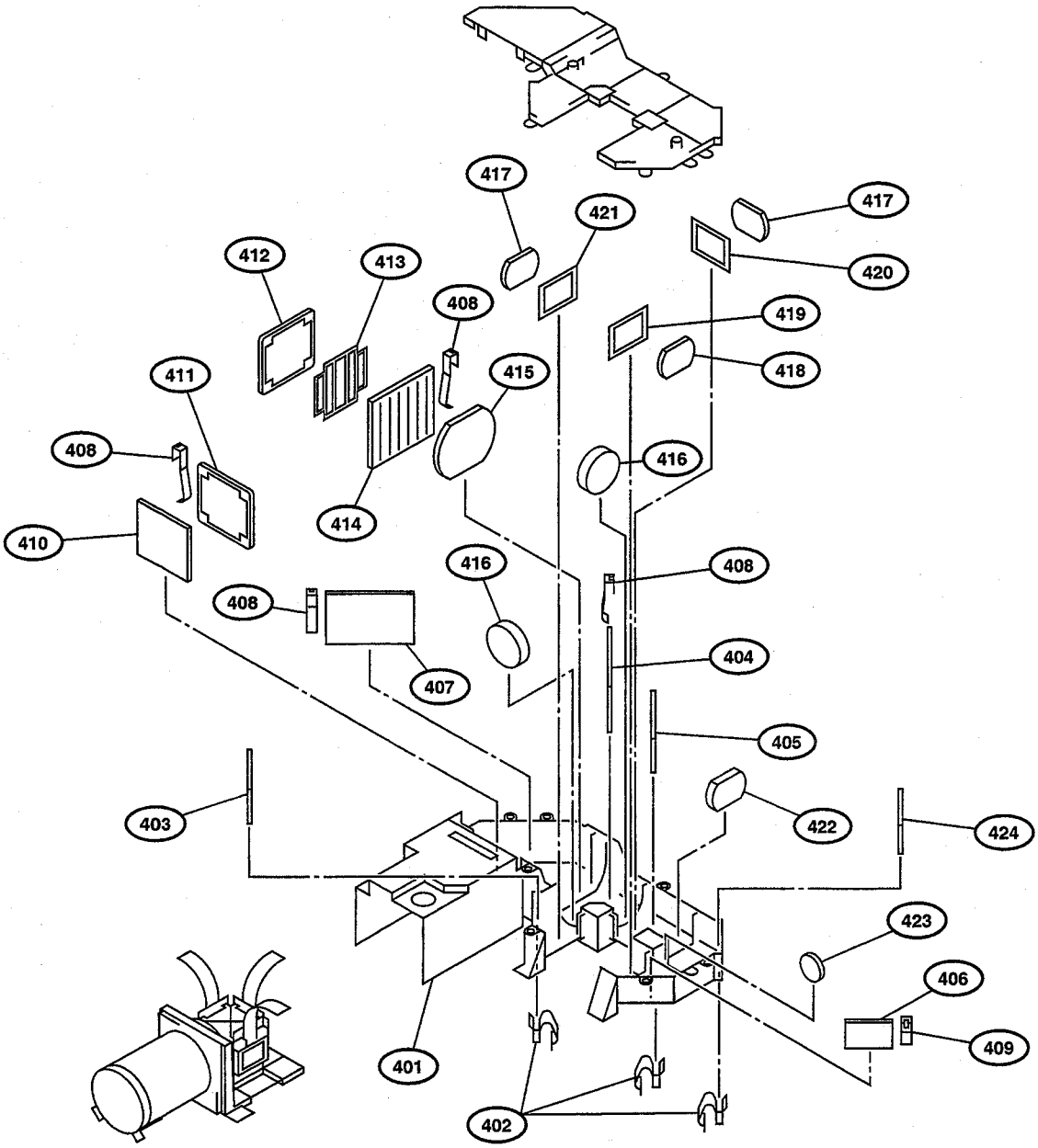

No.	Part No.	SP	Description
401	4-082-825-01	o	BASE, UNIT
402	4-066-172-01	s	FASTENER (OPT), MIRROR
403	4-082-773-01	o	MIRROR, B-CHANNEL
404	4-082-771-01	o	DICHROICMIRROR, B-REFRECT
405	4-082-772-01	o	DICHROICMIRROR, G-REFRECT
406	4-082-775-01	o	MIRROR, R-CHANNEL-2
407	4-082-768-01	o	MIRROR, WIDE BAND
408	4-082-745-01	o	SPRING (FY)
409	4-082-746-01	o	SPRING (R)
410	4-082-783-01	o	FILTER, UV-CUT
411	4-082-792-01	o	FLY EYE, LENSE-1
412	4-082-793-01	o	FLY EYE, LENSE-2
413	4-082-747-01	o	SLIT, P/S
414	A-1501-924-A	s	PS ASSY
415	4-082-778-01	o	LENS, MAIN CONDENSER

No.	Part No.	SP	Description
416	4-082-779-01	o	LENS, MAIN-2
417	4-082-766-01	o	LENS, GB-CH CONDENSER
418	4-082-767-01	o	LENS, R-CH CONDENSER
419	A-1501-911-A	s	IN-POLARIZER (R) ASSY
420	A-1501-912-A	s	IN-POLARIZER (G) ASSY
421	A-1501-913-A	s	IN-POLARIZER (B) ASSY
422	4-082-776-01	o	LENS, RELAY-1
423	4-082-777-01	o	LENS, RELAY-2
424	4-082-774-01	o	MIRROR, R-CHANNEL-1

5-3. Electrical Parts List

BA BOARD

Ref. No. or Q'ty	Part No.	SP	Description
1pc	A-1136-176-A	s	MOUNTED CIRCUIT BOARD, BA [For VPL-CS3]
	A-1136-213-A	s	MOUNTED CIRCUIT BOARD, BA [For VPL-CX2]
	A-1136-222-A	s	MOUNTED CIRCUIT BOARD, BA [For VPL-CX3]
C101	1-162-970-11	s	CAPACITOR CERAMIC 0.01MF/25V B
C102	1-164-217-11	s	CAPACITOR,CERAMIC 150PF/50V CH
C103	1-164-217-11	s	CAPACITOR,CERAMIC 150PF/50V CH
C104	1-113-985-11	s	CAPACITOR,TANTALUM 10MF/20V
C105	1-113-985-11	s	CAPACITOR,TANTALUM 10MF/20V
C106	1-128-004-11	s	CAPACITOR ELECT 10MF/16V(CHIP)
C107	1-107-826-11	s	CAPACITOR,CHIP CERAMIC 0.1MF
C108	1-125-891-11	s	CAPACITOR CERAMIC 0.47MF/10V
C109	1-162-970-11	s	CAPACITOR CERAMIC 0.01MF/25V B
C110	1-107-826-11	s	CAPACITOR,CHIP CERAMIC 0.1MF
C111	1-164-227-11	s	CAPACITOR,CERAMIC 0.022MF/25V
C112	1-162-970-11	s	CAPACITOR CERAMIC 0.01MF/25V B
C113	1-162-970-11	s	CAPACITOR CERAMIC 0.01MF/25V B
C114	1-107-826-11	s	CAPACITOR,CHIP CERAMIC 0.1MF
C115	1-125-838-11	s	CAPACITOR, CERAMIC 2.2MF/6.3V
C116	1-162-970-11	s	CAPACITOR CERAMIC 0.01MF/25V B
C117	1-126-205-11	s	CAPACITOR,ELECT 47M/6.3
C118	1-126-205-11	s	CAPACITOR,ELECT 47M/6.3
C119	1-162-970-11	s	CAPACITOR CERAMIC 0.01MF/25V B
C120	1-162-970-11	s	CAPACITOR CERAMIC 0.01MF/25V B
C121	1-162-915-11	s	CAPACITOR,CERAMIC 10PF/50V CH
C122	1-162-970-11	s	CAPACITOR CERAMIC 0.01MF/25V B
C123	1-125-837-11	s	CAPACITOR,CHIP CERAMIC1MF/6.3V
C124	1-124-779-00	s	CAPACITOR,ELECT 10MF/16V
C125	1-107-826-11	s	CAPACITOR,CHIP CERAMIC 0.1MF
C126	1-126-205-11	s	CAPACITOR,ELECT 47M/6.3
C127	1-107-826-11	s	CAPACITOR,CHIP CERAMIC 0.1MF
C128	1-125-837-11	s	CAPACITOR,CHIP CERAMIC1MF/6.3V
C129	1-107-826-11	s	CAPACITOR,CHIP CERAMIC 0.1MF
C130	1-109-982-11	s	CAPACITOR,CHIP CERAMIC 1MF/10V
C131	1-162-970-11	s	CAPACITOR CERAMIC 0.01MF/25V B
C132	1-162-970-11	s	CAPACITOR CERAMIC 0.01MF/25V B
C133	1-109-982-11	s	CAPACITOR,CHIP CERAMIC 1MF/10V
C134	1-109-982-11	s	CAPACITOR,CHIP CERAMIC 1MF/10V
C135	1-109-982-11	s	CAPACITOR,CHIP CERAMIC 1MF/10V
C136	1-162-970-11	s	CAPACITOR CERAMIC 0.01MF/25V B
C137	1-162-970-11	s	CAPACITOR CERAMIC 0.01MF/25V B
C138	1-115-566-11	s	CAPACITOR,CERAMIC 4.7MF B/6.3V
C139	1-107-826-11	s	CAPACITOR,CHIP CERAMIC 0.1MF
C140	1-107-826-11	s	CAPACITOR,CHIP CERAMIC 0.1MF
C141	1-107-826-11	s	CAPACITOR,CHIP CERAMIC 0.1MF
C142	1-162-970-11	s	CAPACITOR CERAMIC 0.01MF/25V B
C143	1-162-970-11	s	CAPACITOR CERAMIC 0.01MF/25V B
C144	1-107-826-11	s	CAPACITOR,CHIP CERAMIC 0.1MF
C145	1-107-826-11	s	CAPACITOR,CHIP CERAMIC 0.1MF
C146	1-107-826-11	s	CAPACITOR,CHIP CERAMIC 0.1MF
C147	1-128-004-11	s	CAPACITOR ELECT 10MF/16V(CHIP)
C148	1-128-004-11	s	CAPACITOR ELECT 10MF/16V(CHIP)
C149	1-107-826-11	s	CAPACITOR,CHIP CERAMIC 0.1MF
C150	1-107-826-11	s	CAPACITOR,CHIP CERAMIC 0.1MF
C151	1-107-826-11	s	CAPACITOR,CHIP CERAMIC 0.1MF
C152	1-107-826-11	s	CAPACITOR,CHIP CERAMIC 0.1MF
C153	1-107-826-11	s	CAPACITOR,CHIP CERAMIC 0.1MF
C154	1-107-826-11	s	CAPACITOR,CHIP CERAMIC 0.1MF
C155	1-107-826-11	s	CAPACITOR,CHIP CERAMIC 0.1MF

(BA BOARD)

Ref. No. or Q'ty	Part No.	SP	Description
C156	1-104-852-11	s	CAPACITOR,TANTALUM 22MF/10V
C157	1-107-826-11	s	CAPACITOR,CHIP CERAMIC 0.1MF
C158	1-107-826-11	s	CAPACITOR,CHIP CERAMIC 0.1MF
C159	1-107-826-11	s	CAPACITOR,CHIP CERAMIC 0.1MF
C160	1-117-681-11	s	CAPACITOR,ELECT 100MF/16V
C161	1-131-998-11	s	CAPACITOR,SOLID ELECT 82MF 6.3 V
C162	1-107-826-11	s	CAPACITOR,CHIP CERAMIC 0.1MF
C163	1-107-826-11	s	CAPACITOR,CHIP CERAMIC 0.1MF
C164	1-162-964-11	s	CAPACITOR,CERAMIC 1000PF/50V B
C165	1-164-227-11	s	CAPACITOR,CERAMIC 0.022MF/25V
C166	1-113-985-11	s	CAPACITOR,TANTALUM 10MF/20V
C167	1-128-004-11	s	CAPACITOR,ELECT 10MF/16V(CHIP)
C168	1-128-004-11	s	CAPACITOR,ELECT 10MF/16V(CHIP)
C169	1-128-004-11	s	CAPACITOR,ELECT 10MF/16V(CHIP)
C201	1-128-004-11	s	CAPACITOR,ELECT 10MF/16V(CHIP)
C202	1-126-204-11	s	CAPACITOR,ELECT 47MF/16V(CHIP)
C203	1-107-826-11	s	CAPACITOR,CHIP CERAMIC 0.1MF
C204	1-107-826-11	s	CAPACITOR,CHIP CERAMIC 0.1MF
C205	1-107-826-11	s	CAPACITOR,CHIP CERAMIC 0.1MF
C206	1-107-826-11	s	CAPACITOR,CHIP CERAMIC 0.1MF
C207	1-107-826-11	s	CAPACITOR,CHIP CERAMIC 0.1MF
C208	1-107-826-11	s	CAPACITOR,CHIP CERAMIC 0.1MF
C209	1-107-826-11	s	CAPACITOR,CHIP CERAMIC 0.1MF
C210	1-126-204-11	s	CAPACITOR,ELECT 47MF/16V(CHIP)
C211	1-107-826-11	s	CAPACITOR,CHIP CERAMIC 0.1MF
C216	1-125-891-11	s	CAPACITOR,CERAMIC 0.47MF/10V
C218	1-125-891-11	s	CAPACITOR,CERAMIC 0.47MF/10V
C220	1-125-891-11	s	CAPACITOR,CERAMIC 0.47MF/10V
C221	1-125-891-11	s	CAPACITOR,CERAMIC 0.47MF/10V
C222	1-125-891-11	s	CAPACITOR,CERAMIC 0.47MF/10V
C223	1-107-823-11	s	CAPACITOR,CERAMIC 0.47MF/16V
C224	1-125-891-11	s	CAPACITOR CERAMIC 0.47MF/10V
C225	1-125-891-11	s	CAPACITOR CERAMIC 0.47MF/10V
C226	1-125-891-11	s	CAPACITOR CERAMIC 0.47MF/10V
C227	1-125-891-11	s	CAPACITOR CERAMIC 0.47MF/10V
C228	1-128-004-11	s	CAPACITOR ELECT 10MF/16V(CHIP)
C229	1-125-891-11	s	CAPACITOR CERAMIC 0.47MF/10V
C235	1-127-715-11	s	CAPACITOR,CERAMIC 0.22MF B1608
C237	1-107-823-11	s	CAPACITOR,CERAMIC 0.47MF/16V
C238	1-107-823-11	s	CAPACITOR,CERAMIC 0.47MF/16V
C239	1-162-970-11	s	CAPACITOR CERAMIC 0.01MF/25V B
C240	1-125-891-11	s	CAPACITOR CERAMIC 0.47MF/10V
C242	1-107-826-11	s	CAPACITOR,CHIP CERAMIC 0.1MF
C243	1-107-823-11	s	CAPACITOR,CERAMIC 0.47MF/16V
C244	1-107-826-11	s	CAPACITOR,CHIP CERAMIC 0.1MF
C245	1-126-204-11	s	CAPACITOR,ELECT 47MF/16V(CHIP)
C246	1-107-826-11	s	CAPACITOR,CHIP CERAMIC 0.1MF
C247	1-162-964-11	s	CAPACITOR,CERAMIC 1000PF/50V B
C248	1-107-823-11	s	CAPACITOR,CERAMIC 0.47MF/16V
C250	1-128-004-11	s	CAPACITOR,ELECT 10MF/16V(CHIP)
C251	1-107-823-11	s	CAPACITOR,CERAMIC 0.47MF/16V
C252	1-128-004-11	s	CAPACITOR, ELECT 10MF/16V(CHIP)
C253	1-128-004-11	s	CAPACITOR,ELECT 10MF/16V(CHIP)
C254	1-128-004-11	s	CAPACITOR,ELECT 10MF/16V(CHIP)
C301	1-109-982-11	s	CAPACITOR,CHIP CERAMIC 1MF/10V
C302	1-162-927-11	s	CAPACITOR,CERAMIC 100PF/50V CH
C303	1-109-982-11	s	CAPACITOR,CHIP CERAMIC 1MF/10V
C304	1-107-826-11	s	CAPACITOR,CHIP CERAMIC 0.1MF
C305	1-107-826-11	s	CAPACITOR,CHIP CERAMIC 0.1MF
C306	1-162-927-11	s	CAPACITOR,CERAMIC 100PF/50V CH

(BA BOARD)

Ref. No. or Q'ty	Part No.	SP	Description
C307	1-109-982-11	s	CAPACITOR,CHIP CERAMIC 1MF/10V [For VPL-CX3]
CN101	1-785-306-21	o	CONNECTOR, BOARD TO BOARD
CN102	1-779-806-21	s	CONNECTOR, 1.0MM PITCH 8P
CN301	1-793-798-21	o	CONNECTOR, BOARD TO BOARD [For VPL-CX3]
D101	8-719-158-37	s	DIODE RD9.1SB2
D102	8-719-158-37	s	DIODE RD9.1SB2
D103	8-719-914-43	s	DIODE DAN202K
D201	8-719-914-43	s	DIODE DAN202K
D301	8-719-036-94	s	DIODE RD5.6SB-T1 [For VPL-CX3]
D302	8-719-422-12	s	DIODE MA8039 [For VPL-CX3]
D303	8-719-422-12	s	DIODE MA8039 [For VPL-CX3]
D304	8-719-422-12	s	DIODE MA8039 [For VPL-CX3]
D306	8-719-422-12	s	DIODE MA8039 [For VPL-CX3]
FB101	1-414-235-22	s	INDUCTOR, FERRITE BEAD
FB102	1-414-235-22	s	INDUCTOR, FERRITE BEAD
FB103	1-500-245-11	s	BEAD, FERRITE (CHIP)
FB301	1-469-185-11	s	INDUCTOR, FERRITE BEAD [For VPL-CX3]
FB302	1-414-234-11	s	INDUCTOR,FERRITE BEAD [For VPL-CX3]
FB303	1-469-185-11	s	INDUCTOR, FERRITE BEAD [For VPL-CX3]
FB304	1-414-234-11	s	INDUCTOR,FERRITE BEAD [For VPL-CX3]
FB305	1-414-234-11	s	INDUCTOR,FERRITE BEAD [For VPL-CX3]
FB306	1-469-185-11	s	INDUCTOR, FERRITE BEAD [For VPL-CX3]
FB307	1-216-295-91	s	CONDUCTOR, CHIP (2012) [For VPL-CX3]
FB308	1-469-185-11	s	INDUCTOR, FERRITE BEAD [For VPL-CX3]
FB309	1-414-234-11	s	INDUCTOR,FERRITE BEAD [For VPL-CX3]
FB310	1-216-295-91	s	CONDUCTOR, CHIP (2012) [For VPL-CX3]
FL101	1-239-899-21	s	FILTER, CHIP EMI
FL102	1-239-899-21	s	FILTER, CHIP EMI
FL103	1-239-899-21	s	FILTER, CHIP EMI
FL104	1-239-397-11	s	FILTER, LOW PASS (8MHZ)
FL105	1-239-397-11	s	FILTER, LOW PASS (8MHZ)
FL106	1-239-397-11	s	FILTER, LOW PASS (8MHZ)
FL201	1-239-899-21	s	FILTER, CHIP EMI
IC101	8-752-072-81	s	IC CXA1875AM
IC102	8-759-058-58	s	IC TC7S04FU-TE85R
IC103	8-759-058-58	s	IC TC7S04FU-TE85R
IC104	8-752-094-47	s	IC CXA2123AQ-T6
IC105	8-759-494-88	s	IC TC75S56F(TE85R)
IC106	8-752-390-37	s	IC CXD2064Q(T6)
IC202	8-752-086-33	s	IC CXA2101AQ-TL
IC205	8-759-277-63	s	IC TC7W14FU (TE12R)
IC207	8-759-335-28	s	IC TA78M09F (TE16L)
IC301	8-759-684-72	s	IC M24C64-WMN6T(A)
IC302	8-759-681-47	s	IC IRMF-A0T-QTP
IC303	8-719-066-43	s	DIODE GP1U28Y
J101	1-566-822-21	s	JACK
J301	1-793-994-11	s	CONNECTOR, USB (A) [For VPL-CX3]
J302	1-779-677-11	s	CONNECTOR, USB (B) [For VPL-CX3]
L101	1-412-363-11	s	FERRITE, EMI (SMD)
L102	1-412-363-11	s	FERRITE, EMI (SMD)
L103	1-412-363-11	s	FERRITE, EMI (SMD)
L104	1-414-753-91	s	INDUCTOR 4.7UH
L105	1-414-753-91	s	INDUCTOR 4.7UH
L106	1-414-753-91	s	INDUCTOR 4.7UH
L107	1-414-753-91	s	INDUCTOR 4.7UH
L108	1-414-753-91	s	INDUCTOR 4.7UH
L109	1-414-235-22	s	INDUCTOR, FERRITE BEAD

(BA BOARD)

Ref. No. or Q'ty	Part No.	SP	Description
L201	1-414-754-11	s	INDUCTOR 10.0UH
L202	1-414-754-11	s	INDUCTOR 10.0UH
L203	1-414-754-11	s	INDUCTOR 10.0UH
L204	1-414-754-11	s	INDUCTOR 10.0UH
Q101	8-729-013-28	s	TRANSISTOR HN1B01FU-TE85R
Q102	8-729-013-28	s	TRANSISTOR HN1B01FU-TE85R
Q103	8-729-013-28	s	TRANSISTOR HN1B01FU-TE85R
Q104	8-729-230-49	s	TRANSISTOR 2SC2712-YG
Q105	8-729-230-49	s	TRANSISTOR 2SC2712-YG
Q106	8-729-230-49	s	TRANSISTOR 2SC2712-YG
Q107	8-729-216-22	s	TRANSISTOR 2SA1162-G
Q108	8-729-216-22	s	TRANSISTOR 2SA1162-G
Q109	8-729-216-22	s	TRANSISTOR 2SA1162-G
Q203	8-729-216-22	s	TRANSISTOR 2SA1162-G
Q204	8-729-216-22	s	TRANSISTOR 2SA1162-G
Q205	8-729-216-22	s	TRANSISTOR 2SA1162-G
Q207	8-729-216-22	s	TRANSISTOR 2SA1162-G
Q301	8-729-013-28	s	TRANSISTOR HN1B01FU-TE85R
R101	1-216-864-11	s	CONDUCTOR,CHIP (1608)
R102	1-216-853-11	s	RESISTOR,CHIP 470K 1/16W(1608)
R103	1-216-853-11	s	RESISTOR,CHIP 470K 1/16W(1608)
R104	1-216-827-11	s	RESISTOR,CHIP 3.3K 1/16W 1608
R105	1-216-815-11	s	RESISTOR,CHIP 330 1/16W 1608
R106	1-216-833-11	s	RESISTOR,CHIP 10K 1/16W (1608)
R107	1-216-833-11	s	RESISTOR,CHIP 10K 1/16W (1608)
R108	1-216-829-11	s	RESISTOR,CHIP 4.7K 1/16W(1608)
R109	1-216-809-11	s	RESISTOR,CHIP 100 1/16W 1608
R110	1-216-809-11	s	RESISTOR,CHIP 100 1/16W 1608
R111	1-216-809-11	s	RESISTOR,CHIP 100 1/16W 1608
R112	1-216-809-11	s	RESISTOR,CHIP 100 1/16W 1608
R113	1-218-702-11	s	RESISTOR CHIP 2.7K 1/16W(1608)
R114	1-216-864-11	s	CONDUCTOR,CHIP (1608)
R115	1-216-809-11	s	RESISTOR,CHIP 100 1/16W 1608
R117	1-218-726-11	s	RESISTOR CHIP 27K 1/16W (1608)
R119	1-218-706-11	s	RESISTOR,CHIP 3.9K 1/16W(1608)
R120	1-216-833-11	s	RESISTOR,CHIP 10K 1/16W (1608)
R122	1-216-833-11	s	RESISTOR,CHIP 10K 1/16W (1608)
R124	1-216-809-11	s	RESISTOR,CHIP 100 1/16W 1608
R125	1-216-831-11	s	RESISTOR,CHIP 6.8K 1/16W(1608)
R126	1-216-805-11	s	RESISTOR,CHIP 47 1/16W 1608
R127	1-216-864-11	s	CONDUCTOR,CHIP (1608)
R128	1-216-809-11	s	RESISTOR,CHIP 100 1/16W 1608
R129	1-216-864-11	s	CONDUCTOR,CHIP (1608)
R131	1-216-864-11	s	CONDUCTOR,CHIP (1608)
R133	1-218-704-11	s	RESISTOR,CHIP 3.3K 1/16W(1608)
R134	1-218-708-11	s	RESISTOR,CHIP 4.7K 1/16W(1608)
R135	1-216-825-11	s	RESISTOR,CHIP 2.2K 1/16W 1608
R136	1-216-809-11	s	RESISTOR,CHIP 100 1/16W 1608
R137	1-216-809-11	s	RESISTOR,CHIP 100 1/16W 1608
R140	1-216-805-11	s	RESISTOR,CHIP 47 1/16W 1608
R141	1-216-825-11	s	RESISTOR,CHIP 2.2K 1/16W 1608
R145	1-216-825-11	s	RESISTOR,CHIP 2.2K 1/16W 1608
R148	1-216-825-11	s	RESISTOR,CHIP 2.2K 1/16W 1608
R151	1-216-823-11	s	RESISTOR,CHIP 1.5K 1/16W
R152	1-216-827-11	s	RESISTOR,CHIP 3.3K 1/16W 1608
R154	1-216-821-11	s	RESISTOR,CHIP 1.0K 1/16W(1608)
R155	1-216-809-11	s	RESISTOR,CHIP 100 1/16W 1608
R156	1-216-818-11	s	RESISTOR,CHIP 560 1/16W 1608
R158	1-216-837-11	s	RESISTOR,CHIP 22K 1/16W 1608

(BA BOARD)

Ref. No. or Q'ty	Part No.	SP	Description
R159	1-216-839-11	s	RESISTOR,CHIP 33K 1/16W 1608
R162	1-216-822-11	s	RESISTOR,CHIP 1.2K 1/16W 1608
R163	1-216-830-11	s	RESISTOR,CHIP 5.6K 1/16W 1608
R164	1-216-830-11	s	RESISTOR,CHIP 5.6K 1/16W 1608
R165	1-216-818-11	s	RESISTOR,CHIP 560 1/16W 1608
R166	1-216-842-11	s	RESISTOR,CHIP 56K 1/16W(1608)
R167	1-216-818-11	s	RESISTOR,CHIP 560 1/16W 1608
R168	1-216-821-11	s	RESISTOR,CHIP 1.0K 1/16W(1608)
R169	1-216-818-11	s	RESISTOR,CHIP 560 1/16W 1608
R170	1-216-829-11	s	RESISTOR,CHIP 4.7K 1/16W(1608)
R171	1-216-818-11	s	RESISTOR,CHIP 560 1/16W 1608
R172	1-216-821-11	s	RESISTOR,CHIP 1.0K 1/16W(1608)
R173	1-216-821-11	s	RESISTOR,CHIP 1.0K 1/16W(1608)
R174	1-216-821-11	s	RESISTOR,CHIP 1.0K 1/16W(1608)
R175	1-218-672-11	s	RESISTOR,CHIP 150 1/16W(1608)
R176	1-218-672-11	s	RESISTOR,CHIP 150 1/16W(1608)
R177	1-216-839-11	s	RESISTOR,CHIP 33K 1/16W 1608
R178	1-216-839-11	s	RESISTOR,CHIP 33K 1/16W 1608
R179	1-216-839-11	s	RESISTOR,CHIP 33K 1/16W 1608
R180	1-216-837-11	s	RESISTOR,CHIP 22K 1/16W 1608
R181	1-216-837-11	s	RESISTOR,CHIP 22K 1/16W 1608
R182	1-216-837-11	s	RESISTOR,CHIP 22K 1/16W 1608
R201	1-216-816-11	s	RESISTOR,CHIP 390 1/16W 1608
R202	1-216-816-11	s	RESISTOR,CHIP 390 1/16W 1608
R203	1-218-724-11	s	RESISTOR,CHIP 22K 1/16W(1608)
R206	1-216-805-11	s	RESISTOR,CHIP 47 1/16W 1608
R207	1-216-805-11	s	RESISTOR,CHIP 47 1/16W 1608
R208	1-216-809-11	s	RESISTOR,CHIP 100 1/16W 1608
R209	1-216-809-11	s	RESISTOR,CHIP 100 1/16W 1608
R213	1-216-863-11	s	RESISTOR,CHIP 3.3M 1/16W 1608
R214	1-216-805-11	s	RESISTOR,CHIP 47 1/16W 1608
R215	1-216-838-11	s	RESISTOR CHIP 27K 1/16W(1608)
R217	1-216-841-11	s	RESISTOR,CHIP 47K 1/16W 1608
R219	1-218-710-11	s	RESISTOR,CHIP 5.6K 1/16W(1608)
R220	1-216-805-11	s	RESISTOR,CHIP 47 1/16W 1608
R221	1-216-809-11	s	RESISTOR,CHIP 100 1/16W 1608
R222	1-216-809-11	s	RESISTOR,CHIP 100 1/16W 1608
R223	1-218-732-11	s	RESISTOR,CHIP 47K 1/16W(1608)
R225	1-218-708-11	s	RESISTOR,CHIP 4.7K 1/16W(1608)
R228	1-216-805-11	s	RESISTOR,CHIP 47 1/16W 1608
R229	1-216-805-11	s	RESISTOR,CHIP 47 1/16W 1608
R230	1-216-805-11	s	RESISTOR,CHIP 47 1/16W 1608
R231	1-216-821-11	s	RESISTOR,CHIP 1.0K 1/16W(1608)
R233	1-216-821-11	s	RESISTOR,CHIP 1.0K 1/16W(1608)
R235	1-216-821-11	s	RESISTOR,CHIP 1.0K 1/16W(1608)
R236	1-216-809-11	s	RESISTOR,CHIP 100 1/16W 1608
R237	1-216-833-11	s	RESISTOR,CHIP 10K 1/16W (1608)
R242	1-218-708-11	s	RESISTOR,CHIP 4.7K 1/16W(1608)
R243	1-216-805-11	s	RESISTOR,CHIP 47 1/16W 1608
R301	1-216-821-11	s	RESISTOR,CHIP 1.0K 1/16W(1608)
R302	1-216-809-11	s	RESISTOR,CHIP 100 1/16W 1608
R303	1-216-809-11	s	RESISTOR,CHIP 100 1/16W 1608
R304	1-216-841-11	s	RESISTOR,CHIP 47K 1/16W 1608
R305	1-216-841-11	s	RESISTOR,CHIP 47K 1/16W 1608
R306	1-216-809-11	s	RESISTOR,CHIP 100 1/16W 1608
R307	1-216-830-11	s	RESISTOR,CHIP 5.6K 1/16W 1608
R308	1-216-809-11	s	RESISTOR,CHIP 100 1/16W 1608
R309	1-216-809-11	s	RESISTOR,CHIP 100 1/16W 1608
R310	1-216-809-11	s	RESISTOR,CHIP 100 1/16W 1608

(BA BOARD)

Ref. No. or Q'ty	Part No.	SP	Description
R311	1-216-841-11	s	RESISTOR,CHIP 47K 1/16W 1608
R312	1-216-809-11	s	RESISTOR,CHIP 100 1/16W 1608
RB101	1-233-576-11	s	RESISTOR,CHIP NETWORK 100
RB102	1-236-908-11	s	RESISTOR,NETWORK 10K (3216)
RB103	1-236-908-11	s	RESISTOR,NETWORK 10K (3216)
TH101	1-808-656-11	s	THERMISTOR
X101	1-781-612-11	s	VIBRATOR,CRYSTAL

BB BOARD

Ref. No. or Q'ty	Part No.	SP	Description
1pc	A-1136-175-A	s	MOUNTED CIRCUIT BOARD, BB [For VPL-CS3]
	A-1136-212-A	s	MOUNTED CIRCUIT BOARD, BB [For VPL-CX2]
	A-1136-221-A	s	MOUNTED CIRCUIT BOARD, BB [For VPL-CX3]
C101	1-162-970-11	s	CAPACITOR,CERAMIC 0.01MF/25V B
C102	1-162-970-11	s	CAPACITOR,CERAMIC 0.01MF/25V B
C103	1-162-970-11	s	CAPACITOR,CERAMIC 0.01MF/25V B
C104	1-126-205-11	s	CAPACITOR,ELECT 47M/6.3
C105	1-126-205-11	s	CAPACITOR,ELECT 47M/6.3
C106	1-126-205-11	s	CAPACITOR,ELECT 47M/6.3
C107	1-115-566-11	s	CAPACITOR,CERAMIC 4.7MF B/6.3V
C108	1-115-566-11	s	CAPACITOR,CERAMIC 4.7MF B/6.3V
C109	1-107-826-11	s	CAPACITOR,CHIP CERAMIC 0.1MF
C110	1-107-826-11	s	CAPACITOR,CHIP CERAMIC 0.1MF
C111	1-107-826-11	s	CAPACITOR,CHIP CERAMIC 0.1MF
C112	1-107-826-11	s	CAPACITOR,CHIP CERAMIC 0.1MF
C113	1-107-826-11	s	CAPACITOR,CHIP CERAMIC 0.1MF
C118	1-107-826-11	s	CAPACITOR,CHIP CERAMIC 0.1MF
C119	1-131-998-11	s	CAPACITOR,SOLID ELECT 82MF 6.3 V
C120	1-107-826-11	s	CAPACITOR,CHIP CERAMIC 0.1MF
C121	1-107-826-11	s	CAPACITOR,CHIP CERAMIC 0.1MF
C122	1-115-566-11	s	CAPACITOR,CERAMIC 4.7MF B/6.3V
C123	1-131-998-11	s	CAPACITOR,SOLID ELECT 82MF 6.3 V
C124	1-107-826-11	s	CAPACITOR,CHIP CERAMIC 0.1MF
C125	1-107-826-11	s	CAPACITOR,CHIP CERAMIC 0.1MF
C126	1-107-826-11	s	CAPACITOR,CHIP CERAMIC 0.1MF
C127	1-107-826-11	s	CAPACITOR,CHIP CERAMIC 0.1MF
C128	1-110-563-11	s	CAPACITOR CERAMIC 0.068MF/16V
C129	1-115-566-11	s	CAPACITOR,CERAMIC 4.7MF B/6.3V
C130	1-115-566-11	s	CAPACITOR,CERAMIC 4.7MF B/6.3V
C131	1-124-779-00	s	CAPACITOR,ELECT 10MF/16V
C132	1-162-927-11	s	CAPACITOR,CERAMIC 100PF/50V CH
C133	1-164-816-11	s	CAPACITOR,CERAMIC 220PF/50V CH
C134	1-162-970-11	s	CAPACITOR CERAMIC 0.01MF/25V B
C135	1-126-206-11	s	CAPACITOR,ELECT 100MF/6.3V
C136	1-107-826-11	s	CAPACITOR,CHIP CERAMIC 0.1MF
C137	1-162-927-11	s	CAPACITOR,CERAMIC 100PF/50V CH
C138	1-107-826-11	s	CAPACITOR,CHIP CERAMIC 0.1MF
C139	1-107-826-11	s	CAPACITOR,CHIP CERAMIC 0.1MF
C140	1-107-826-11	s	CAPACITOR,CHIP CERAMIC 0.1MF
C141	1-162-927-11	s	CAPACITOR,CERAMIC 100PF/50V CH
C142	1-162-964-11	s	CAPACITOR,CERAMIC 1000PF/50V B
C143	1-165-112-11	s	CAPACITOR,CERAMIC 0.33MF/16V F
C144	1-124-778-00	s	CAPACITOR,ELECT 22MF/6.3V
C145	1-124-778-00	s	CAPACITOR,ELECT 22MF/6.3V
C201	1-165-176-11	s	CAPACITOR,CERAMIC 47000PF/16V
C202	1-164-505-11	s	CAPACITOR,CHIP CERAMIC 2.2MF
C203	1-165-176-11	s	CAPACITOR,CERAMIC 47000PF/16V
C204	1-107-826-11	s	CAPACITOR,CHIP CERAMIC 0.1MF
C205	1-165-176-11	s	CAPACITOR,CERAMIC 47000PF/16V
C206	1-162-970-11	s	CAPACITOR,CERAMIC 0.01MF/25V B
C207	1-107-826-11	s	CAPACITOR,CHIP CERAMIC 0.1MF
C208	1-107-826-11	s	CAPACITOR,CHIP CERAMIC 0.1MF
C209	1-165-176-11	s	CAPACITOR,CERAMIC 47000PF/16V
C210	1-107-826-11	s	CAPACITOR,CHIP CERAMIC 0.1MF
C211	1-162-970-11	s	CAPACITOR,CERAMIC 0.01MF/25V B
C212	1-107-826-11	s	CAPACITOR,CHIP CERAMIC 0.1MF
C213	1-162-970-11	s	CAPACITOR,CERAMIC 0.01MF/25V B
C214	1-162-970-11	s	CAPACITOR,CERAMIC 0.01MF/25V B

Ref. No. or Q'ty	Part No.	SP	Description
C215	1-107-826-11	s	CAPACITOR,CHIP CERAMIC 0.1MF
C216	1-119-667-11	s	CAPACITOR,CERAMIC 22MF/10V(F)
C217	1-107-826-11	s	CAPACITOR,CHIP CERAMIC 0.1MF
C218	1-126-205-11	s	CAPACITOR,ELECT 47M/6.3
C219	1-107-826-11	s	CAPACITOR,CHIP CERAMIC 0.1MF
C220	1-162-970-11	s	CAPACITOR,CERAMIC 0.01MF/25V B
C221	1-107-826-11	s	CAPACITOR,CHIP CERAMIC 0.1MF
C222	1-164-173-11	s	CAPACITOR,CERAMIC 3900PF/50V B
C223	1-137-652-91	s	CAPACITOR,CERAMIC 39000PF /16V
C224	1-107-826-11	s	CAPACITOR,CHIP CERAMIC 0.1MF
C225	1-107-826-11	s	CAPACITOR,CHIP CERAMIC 0.1MF
C226	1-162-970-11	s	CAPACITOR,CERAMIC 0.01MF/25V B
C227	1-107-826-11	s	CAPACITOR,CHIP CERAMIC 0.1MF
C228	1-162-970-11	s	CAPACITOR,CERAMIC 0.01MF/25V B
C229	1-162-970-11	s	CAPACITOR,CERAMIC 0.01MF/25V B
C230	1-107-826-11	s	CAPACITOR,CHIP CERAMIC 0.1MF
C231	1-107-826-11	s	CAPACITOR,CHIP CERAMIC 0.1MF
C232	1-162-970-11	s	CAPACITOR,CERAMIC 0.01MF/25V B
C233	1-107-826-11	s	CAPACITOR,CHIP CERAMIC 0.1MF
C234	1-162-970-11	s	CAPACITOR,CERAMIC 0.01MF/25V B
C235	1-164-505-11	s	CAPACITOR,CHIP CERAMIC 2.2MF
C236	1-162-916-11	s	CAPACITOR,CERAMIC 12PF/50V CH
C237	1-162-916-11	s	CAPACITOR,CERAMIC 12PF/50V CH
C238	1-107-826-11	s	CAPACITOR,CHIP CERAMIC 0.1MF
C239	1-162-970-11	s	CAPACITOR,CERAMIC 0.01MF/25V B
C240	1-119-667-11	s	CAPACITOR,CERAMIC 22MF/10V(F)
C301	1-107-826-11	s	CAPACITOR,CHIP CERAMIC 0.1MF
C302	1-107-826-11	s	CAPACITOR,CHIP CERAMIC 0.1MF
C303	1-107-826-11	s	CAPACITOR,CHIP CERAMIC 0.1MF
C304	1-107-826-11	s	CAPACITOR,CHIP CERAMIC 0.1MF
C305	1-107-826-11	s	CAPACITOR,CHIP CERAMIC 0.1MF
C306	1-107-826-11	s	CAPACITOR,CHIP CERAMIC 0.1MF
C307	1-107-826-11	s	CAPACITOR,CHIP CERAMIC 0.1MF
C308	1-107-826-11	s	CAPACITOR,CHIP CERAMIC 0.1MF
C309	1-107-826-11	s	CAPACITOR,CHIP CERAMIC 0.1MF
C310	1-107-826-11	s	CAPACITOR,CHIP CERAMIC 0.1MF
C311	1-107-826-11	s	CAPACITOR,CHIP CERAMIC 0.1MF
C312	1-107-826-11	s	CAPACITOR,CHIP CERAMIC 0.1MF
C313	1-107-826-11	s	CAPACITOR,CHIP CERAMIC 0.1MF
C314	1-109-982-11	s	CAPACITOR,CHIP CERAMIC 1MF/10V
C315	1-107-826-11	s	CAPACITOR,CHIP CERAMIC 0.1MF
C316	1-107-826-11	s	CAPACITOR,CHIP CERAMIC 0.1MF
C317	1-107-826-11	s	CAPACITOR,CHIP CERAMIC 0.1MF
C318	1-107-826-11	s	CAPACITOR,CHIP CERAMIC 0.1MF
C319	1-107-826-11	s	CAPACITOR,CHIP CERAMIC 0.1MF
C320	1-126-205-11	s	CAPACITOR,ELECT 47M/6.3
C321	1-107-826-11	s	CAPACITOR,CHIP CERAMIC 0.1MF
C322	1-107-826-11	s	CAPACITOR,CHIP CERAMIC 0.1MF
C323	1-107-826-11	s	CAPACITOR,CHIP CERAMIC 0.1MF
C324	1-126-205-11	s	CAPACITOR,ELECT 47M/6.3
C325	1-107-826-11	s	CAPACITOR,CHIP CERAMIC 0.1MF
C326	1-107-826-11	s	CAPACITOR,CHIP CERAMIC 0.1MF
C327	1-107-826-11	s	CAPACITOR,CHIP CERAMIC 0.1MF
C328	1-107-826-11	s	CAPACITOR,CHIP CERAMIC 0.1MF
C329	1-107-826-11	s	CAPACITOR,CHIP CERAMIC 0.1MF
C330	1-107-826-11	s	CAPACITOR,CHIP CERAMIC 0.1MF
C331	1-107-826-11	s	CAPACITOR,CHIP CERAMIC 0.1MF
C332	1-107-826-11	s	CAPACITOR,CHIP CERAMIC 0.1MF
C333	1-107-826-11	s	CAPACITOR,CHIP CERAMIC 0.1MF
C334	1-107-826-11	s	CAPACITOR,CHIP CERAMIC 0.1MF
C335	1-107-826-11	s	CAPACITOR,CHIP CERAMIC 0.1MF

(BB BOARD)

Ref. No. or Q'ty	Part No.	SP	Description
C336	1-107-826-11	s	CAPACITOR,CHIP CERAMIC 0.1MF
C337	1-107-826-11	s	CAPACITOR,CHIP CERAMIC 0.1MF
C338	1-107-826-11	s	CAPACITOR,CHIP CERAMIC 0.1MF
C401	1-109-982-11	s	CAPACITOR,CHIP CERAMIC 1MF/10V
C402	1-109-982-11	s	CAPACITOR,CHIP CERAMIC 1MF/10V
C403	1-109-982-11	s	CAPACITOR,CHIP CERAMIC 1MF/10V
C404	1-115-566-11	s	CAPACITOR,CERAMIC 4.7MF B/6.3V
C405	1-125-889-11	s	CAPACITOR, C.CERAMIC 2.2MF
C406	1-107-826-11	s	CAPACITOR,CHIP CERAMIC 0.1MF
C407	1-107-826-11	s	CAPACITOR,CHIP CERAMIC 0.1MF
C408	1-107-826-11	s	CAPACITOR,CHIP CERAMIC 0.1MF
C409	1-162-915-11	s	CAPACITOR,CERAMIC 10PF/50V CH
C410	1-107-826-11	s	CAPACITOR,CHIP CERAMIC 0.1MF
C411	1-162-915-11	s	CAPACITOR,CERAMIC 10PF/50V CH
C412	1-162-970-11	s	CAPACITOR,CERAMIC 0.01MF/25V B
C413	1-164-315-11	s	CAPACITOR,CERAMIC 470PF/50V CH
C414	1-107-826-11	s	CAPACITOR,CHIP CERAMIC 0.1MF
C415	1-107-826-11	s	CAPACITOR,CHIP CERAMIC 0.1MF
C416	1-107-826-11	s	CAPACITOR,CHIP CERAMIC 0.1MF
C417	1-162-970-11	s	CAPACITOR,CERAMIC 0.01MF/25V B
CN101	1-784-828-11	s	CONNECTOR, D SUB
CN102	1-815-354-11	o	CONNECTOR, BOARD TO BOARD 50P [For VPL-CX3]
CN103	1-785-305-21	o	CONNECTOR, BOARD TO BOARD
CN104	1-785-305-21	o	CONNECTOR, BOARD TO BOARD
CN105	1-785-305-21	o	CONNECTOR, BOARD TO BOARD
D101	8-719-073-11	s	DIODE BZA456A
D102	8-719-800-76	s	DIODE 1SS226
D103	8-719-800-76	s	DIODE 1SS226
D104	8-719-800-76	s	DIODE 1SS226
D105	8-719-024-77	s	DIODE HN1D03FU-TE85L
D106	8-719-988-61	s	DIODE 1SS355TE-17
D107	8-719-988-61	s	DIODE 1SS355TE-17
D301	8-719-914-43	s	DIODE DAN202K
D401	8-719-024-77	s	DIODE HN1D03FU-TE85L
D402	8-719-024-77	s	DIODE HN1D03FU-TE85L
FB101	1-414-921-11	s	INDUCTOR, FERRITE BEAD
FB102	1-414-921-11	s	INDUCTOR, FERRITE BEAD
FB103	1-414-921-11	s	INDUCTOR, FERRITE BEAD
FB104	1-414-921-11	s	INDUCTOR, FERRITE BEAD
FB105	1-414-921-11	s	INDUCTOR, FERRITE BEAD
FB202	1-414-921-11	s	INDUCTOR, FERRITE BEAD
FB301	1-500-451-11	s	MICRO INDUCTOR (CHIP) 41P750S
FB302	1-414-921-11	s	INDUCTOR, FERRITE BEAD
FB303	1-500-451-11	s	MICRO INDUCTOR (CHIP) 41P750S
FB304	1-414-921-11	s	INDUCTOR, FERRITE BEAD
FB305	1-414-921-11	s	INDUCTOR, FERRITE BEAD
IC101	————	s	IC ST24FC21M6TR
Note	If this IC has failed, replace the whole BB board.		
IC102	8-759-541-25	s	IC M52758FP
IC103	8-759-646-02	s	IC M52347FP-TE
IC104	8-759-531-92	s	IC TC7WH04FU(TE12R)
IC105	8-759-472-37	s	IC 74VHC240MTCX
IC106	8-759-586-19	s	IC TC7WH123FU(TE12R)
IC107	8-752-072-81	s	IC CXA1875AM
IC108	8-759-533-85	s	IC L88M05T-FA-TL
IC109	8-759-652-56	s	IC BA033F-E2
IC119	8-759-058-54	s	IC TC7S00FU-TE85R [For VPL-CX3]
IC201	8-759-659-65	s	IC LP2985IM5X-3.3

(BB BOARD)

Ref. No. or Q'ty	Part No.	SP	Description
IC202	8-759-670-41	s	IC AD9884AKS-100 [For VPL-CS3]
	8-759-645-12	S	IC AD9884AKS-140 [For VPL-CX2/CX3]
IC203	8-759-472-14	s	IC 74VHC125MTCX
IC205	8-759-683-96	s	IC MK1714-01RT
IC301	8-759-544-01	s	IC S-80828ANNP-EDR-T2
IC302	8-759-471-89	s	IC 74VHC02MTCX
IC303	8-759-831-61	s	IC PW164-10RS
IC304	8-759-472-14	s	IC 74VHC125MTCX
IC305	6-800-487-01	s	IC MBM29LV400TC-70PFTN-SX1713
Note	Use this IC for VPL-CX2/CX3 after it is written in all kind of data by writer.		
IC306	8-759-573-65	s	IC IDT71V016S20PHAU-TL
IC401	8-759-582-91	s	IC S-80842ANNP-ED6-T2
IC402	8-759-544-01	s	IC S-80828ANNP-EDR-T2
IC403	8-759-648-10	s	IC HD64F2633TE
Note	Use this IC after it is written in all kind of data by flash memory writer.		
IC404	8-759-659-65	s	IC LP2985IM5X-3.3
IC405	8-759-575-16	s	IC LMC7101BIM5X [For VPL-CX3]
L201	1-412-057-11	s	INDUCTOR (SMALL TYPE) 6.8UH
L202	1-469-528-91	s	INDUCTOR 100UH (NLFV25)
Q101	8-729-140-63	s	TRANSISTOR 2SA1611-M5M6
Q102	8-729-013-28	s	TRANSISTOR HN1B01FU-TE85R
Q103	8-729-013-28	s	TRANSISTOR HN1B01FU-TE85R
Q201	8-729-427-72	s	TRANSISTOR XP4501-TXE
Q202	8-729-907-00	s	TRANSISTOR DTC114EU
R101	1-216-864-11	s	CONDUCTOR,CHIP (1608)
R102	1-216-864-11	s	CONDUCTOR,CHIP (1608)
R103	1-216-864-11	s	CONDUCTOR,CHIP (1608)
R104	1-216-625-11	s	RESISTOR,CHIP 82 1/10W
R105	1-216-625-11	s	RESISTOR,CHIP 82 1/10W
R106	1-216-625-11	s	RESISTOR,CHIP 82 1/10W
R107	1-216-864-11	s	CONDUCTOR,CHIP (1608)
R108	1-216-821-11	s	RESISTOR,CHIP 1.0K 1/16W(1608)
R109	1-216-805-11	s	RESISTOR,CHIP 47 1/16W 1608
R110	1-216-821-11	s	RESISTOR,CHIP 1.0K 1/16W(1608)
R111	1-216-805-11	s	RESISTOR,CHIP 47 1/16W 1608
R112	1-216-813-11	s	RESISTOR,CHIP 220 1/16W 1608
R113	1-216-817-11	s	RESISTOR,CHIP 470 1/16W 1608
R114	1-216-817-11	s	RESISTOR,CHIP 470 1/16W 1608
R115	1-216-835-11	s	RESISTOR,CHIP 15K 1/16W
R116	1-216-817-11	s	RESISTOR,CHIP 470 1/16W 1608
R117	1-216-805-11	s	RESISTOR,CHIP 47 1/16W 1608
R118	1-216-805-11	s	RESISTOR,CHIP 47 1/16W 1608
R119	1-216-835-11	s	RESISTOR,CHIP 15K 1/16W
R120	1-216-817-11	s	RESISTOR,CHIP 470 1/16W 1608
R121	1-216-805-11	s	RESISTOR,CHIP 47 1/16W 1608
R122	1-216-805-11	s	RESISTOR,CHIP 47 1/16W 1608
R123	1-216-805-11	s	RESISTOR,CHIP 47 1/16W 1608
R124	1-216-841-11	s	RESISTOR,CHIP 47K 1/16W 1608
R125	1-216-805-11	s	RESISTOR,CHIP 47 1/16W 1608
R126	1-216-821-11	s	RESISTOR,CHIP 1.0K 1/16W(1608)
R127	1-216-821-11	s	RESISTOR,CHIP 1.0K 1/16W(1608)
R128	1-216-817-11	s	RESISTOR,CHIP 470 1/16W 1608
R129	1-216-821-11	s	RESISTOR,CHIP 1.0K 1/16W(1608)
R130	1-216-821-11	s	RESISTOR,CHIP 1.0K 1/16W(1608)
R131	1-216-845-11	s	RESISTOR,CHIP 100K 1/16W(1608)
R132	1-216-805-11	s	RESISTOR,CHIP 47 1/16W 1608
R133	1-216-805-11	s	RESISTOR,CHIP 47 1/16W 1608
R134	1-216-805-11	s	RESISTOR,CHIP 47 1/16W 1608
R135	1-218-688-11	s	RESISTOR,CHIP 680 1/16W(1608)

(BB BOARD)

Ref. No. or Q'ty	Part No.	SP	Description
R136	1-218-688-11	s	RESISTOR,CHIP 680 1/16W(1608)
R137	1-218-688-11	s	RESISTOR,CHIP 680 1/16W(1608)
R138	1-216-841-11	s	RESISTOR,CHIP 47K 1/16W 1608
R139	1-216-833-11	s	RESISTOR,CHIP 10K 1/16W (1608)
R140	1-216-864-11	s	CONDUCTOR,CHIP (1608)
R141	1-216-864-11	s	CONDUCTOR,CHIP (1608)
R142	1-216-864-11	s	CONDUCTOR,CHIP (1608)
R143	1-216-809-11	s	RESISTOR,CHIP 100 1/16W 1608
R144	1-216-809-11	s	RESISTOR,CHIP 100 1/16W 1608
R147	1-218-732-11	s	RESISTOR,CHIP 47K 1/16W(1608)
R148	1-218-708-11	s	RESISTOR,CHIP 4.7K 1/16W(1608)
R149	1-216-833-11	s	RESISTOR,CHIP 10K 1/16W (1608)
R150	1-218-716-11	s	RESISTOR,CHIP 10K 1/16W(1608)
R151	1-216-827-11	s	RESISTOR,CHIP 3.3K 1/16W 1608
R152	1-216-833-11	s	RESISTOR,CHIP 10K 1/16W (1608)
R153	1-216-809-11	s	RESISTOR,CHIP 100 1/16W 1608
R154	1-216-809-11	s	RESISTOR,CHIP 100 1/16W 1608
R155	1-216-811-11	s	RESISTOR,CHIP 150 1/16W(1608)
R156	1-216-810-11	s	RESISTOR,CHIP 120 1/16W 1608
R157	1-216-809-11	s	RESISTOR,CHIP 100 1/16W 1608
R158	1-216-809-11	s	RESISTOR,CHIP 100 1/16W 1608
R159	1-216-809-11	s	RESISTOR,CHIP 100 1/16W 1608
R160	1-216-809-11	s	RESISTOR,CHIP 100 1/16W 1608
R201	1-216-809-11	s	RESISTOR,CHIP 100 1/16W 1608
R202	1-216-805-11	s	RESISTOR,CHIP 47 1/16W 1608
R203	1-216-845-11	s	RESISTOR,CHIP 100K 1/16W(1608)
R205	1-216-805-11	s	RESISTOR,CHIP 47 1/16W 1608
R206	1-216-801-11	s	RESISTOR,CHIP 22 1/16W (1608)
R207	1-216-801-11	s	RESISTOR,CHIP 22 1/16W (1608)
R208	1-216-851-11	s	RESISTOR,CHIP 330K 1/16W 1608
R211	1-216-809-11	s	RESISTOR,CHIP 100 1/16W 1608
R212	1-216-805-11	s	RESISTOR,CHIP 47 1/16W 1608
R213	1-216-833-11	s	RESISTOR,CHIP 10K 1/16W (1608)
R214	1-216-825-11	s	RESISTOR,CHIP 2.2K 1/16W 1608
R215	1-218-704-11	s	RESISTOR,CHIP 3.3K 1/16W(1608)
R216	1-216-805-11	s	RESISTOR,CHIP 47 1/16W 1608
R217	1-216-805-11	s	RESISTOR,CHIP 47 1/16W 1608
R218	1-216-801-11	s	RESISTOR,CHIP 22 1/16W (1608)
R219	1-216-809-11	s	RESISTOR,CHIP 100 1/16W 1608
R220	1-216-809-11	s	RESISTOR,CHIP 100 1/16W 1608
R221	1-216-833-11	s	RESISTOR,CHIP 10K 1/16W (1608) [For VPL-CX3]
R222	1-216-833-11	s	RESISTOR,CHIP 10K 1/16W (1608) [For VPL-CS3/CX2]
R223	1-216-833-11	s	RESISTOR,CHIP 10K 1/16W (1608)
R224	1-216-821-11	s	RESISTOR,CHIP 1.0K 1/16W(1608)
R225	1-216-821-11	s	RESISTOR,CHIP 1.0K 1/16W(1608)
R226	1-216-801-11	s	RESISTOR,CHIP 22 1/16W (1608)
R227	1-216-821-11	s	RESISTOR,CHIP 1.0K 1/16W(1608)
R228	1-216-821-11	s	RESISTOR,CHIP 1.0K 1/16W(1608)
R229	1-216-805-11	s	RESISTOR,CHIP 47 1/16W 1608
R230	1-216-801-11	s	RESISTOR,CHIP 22 1/16W 1608
R231	1-216-801-11	s	RESISTOR,CHIP 22 1/16W (1608)
R232	1-216-821-11	s	RESISTOR,CHIP 1.0K 1/16W(1608)
R233	1-216-821-11	s	RESISTOR,CHIP 1.0K 1/16W(1608)
R235	1-216-833-11	s	RESISTOR,CHIP 10K 1/16W (1608)
R247	1-216-864-11	s	CONDUCTOR,CHIP (1608) [For VPL-CX3]
R248	1-216-833-11	s	RESISTOR,CHIP 10K 1/16W (1608) [For VPL-CX3]
R301	1-216-809-11	s	RESISTOR,CHIP 100 1/16W 1608
R302	1-216-839-11	s	RESISTOR,CHIP 33K 1/16W 1608

(BB BOARD)

Ref. No. or Q'ty	Part No.	SP	Description
R303	1-216-833-11	s	RESISTOR,CHIP 10K 1/16W (1608)
R304	1-216-833-11	s	RESISTOR,CHIP 10K 1/16W (1608)
R306	1-216-809-11	s	RESISTOR,CHIP 100 1/16W 1608
R307	1-216-809-11	s	RESISTOR,CHIP 100 1/16W 1608
R308	1-216-809-11	s	RESISTOR,CHIP 100 1/16W 1608
R309	1-216-809-11	s	RESISTOR,CHIP 100 1/16W 1608
R310	1-216-827-11	s	RESISTOR,CHIP 3.3K 1/16W 1608
R311	1-216-827-11	s	RESISTOR,CHIP 3.3K 1/16W 1608
R312	1-216-805-11	s	RESISTOR,CHIP 47 1/16W 1608
R313	1-216-821-11	s	RESISTOR,CHIP 1.0K 1/16W(1608)
R314	1-216-805-11	s	RESISTOR,CHIP 47 1/16W 1608
R315	1-216-833-11	s	RESISTOR,CHIP 10K 1/16W (1608)
R316	1-216-833-11	s	RESISTOR,CHIP 10K 1/16W (1608)
R317	1-216-833-11	s	RESISTOR,CHIP 10K 1/16W (1608)
R318	1-216-825-11	s	RESISTOR,CHIP 2.2K 1/16W 1608
R401	1-216-833-11	s	RESISTOR,CHIP 10K 1/16W (1608)
R402	1-216-839-11	s	RESISTOR,CHIP 33K 1/16W 1608
R403	1-216-833-11	s	RESISTOR,CHIP 10K 1/16W (1608)
R404	1-216-839-11	s	RESISTOR,CHIP 33K 1/16W 1608
R405	1-216-841-11	s	RESISTOR,CHIP 47K 1/16W 1608
R406	1-216-833-11	s	RESISTOR,CHIP 10K 1/16W (1608)
R407	1-216-833-11	s	RESISTOR,CHIP 10K 1/16W (1608)
R408	1-216-833-11	s	RESISTOR,CHIP 10K 1/16W (1608)
R409	1-216-825-11	s	RESISTOR,CHIP 2.2K 1/16W 1608
R410	1-216-833-11	s	RESISTOR,CHIP 10K 1/16W (1608)
R411	1-216-833-11	s	RESISTOR,CHIP 10K 1/16W (1608)
R412	1-216-833-11	s	RESISTOR,CHIP 10K 1/16W (1608)
R413	1-216-825-11	s	RESISTOR,CHIP 2.2K 1/16W 1608
R415	1-216-821-11	s	RESISTOR,CHIP 1.0K 1/16W(1608)
R416	1-216-825-11	s	RESISTOR,CHIP 2.2K 1/16W 1608
R417	1-216-825-11	s	RESISTOR,CHIP 2.2K 1/16W 1608
R418	1-216-833-11	s	RESISTOR,CHIP 10K 1/16W (1608)
R419	1-216-833-11	s	RESISTOR,CHIP 10K 1/16W (1608)
R420	1-216-797-11	s	RESISTOR,CHIP 10 1/16W 1608
R421	1-218-703-11	s	RESISTOR,CHIP 3.0K 1/16(1608)
R422	1-218-675-11	s	RESISTOR,CHIP 200 1/16W (1608)
R423	1-216-809-11	s	RESISTOR,CHIP 100 1/16W 1608
R424	1-216-809-11	s	RESISTOR,CHIP 100 1/16W 1608
R426	1-216-825-11	s	RESISTOR,CHIP 2.2K 1/16W 1608
R427	1-216-825-11	s	RESISTOR,CHIP 2.2K 1/16W 1608
R429	1-216-833-11	s	RESISTOR,CHIP 10K 1/16W (1608)
R430	1-216-833-11	s	RESISTOR,CHIP 10K 1/16W (1608)
R431	1-216-833-11	s	RESISTOR,CHIP 10K 1/16W (1608)
R432	1-216-833-11	s	RESISTOR,CHIP 10K 1/16W (1608)
R433	1-216-833-11	s	RESISTOR,CHIP 10K 1/16W (1608)
R435	1-218-726-11	s	RESISTOR CHIP 27K 1/16W (1608) [For VPL-CX3]
R437	1-218-734-11	s	RESISTOR,CHIP 56K 1/16W(1608) [For VPL-CX3]
R438	1-216-809-11	s	RESISTOR,CHIP 100 1/16W (1608) [For VPL-CX3]
R440	1-216-833-11	s	RESISTOR,CHIP 10K 1/16W (1608) [For VPL-CS3/CX2]
R441	1-216-833-11	s	RESISTOR,CHIP 10K 1/16W (1608) [For VPL-CX2/CX3]
R442	1-216-833-11	s	RESISTOR,CHIP 10K 1/16W (1608) [For VPL-CX3]
R443	1-216-833-11	s	RESISTOR,CHIP 10K 1/16W (1608) [For VPL-CS3]
R444	1-216-833-11	s	RESISTOR,CHIP 10K 1/16W (1608)
R445	1-216-833-11	s	RESISTOR,CHIP 10K 1/16W (1608)
R446	1-216-809-11	s	RESISTOR,CHIP 100 1/16W 1608

(BB BOARD)

Ref. No. or Q'ty	Part No.	SP	Description
R447	1-216-809-11	s	RESISTOR,CHIP 100 1/16W 1608
R448	1-216-809-11	s	RESISTOR,CHIP 100 1/16W 1608
RB201	1-236-908-11	s	RESISTOR,NETWORK 10K (3216) [For VPL-CS3/CX2]
RB202	1-233-574-11	s	RESISTOR,CHIP NETWORK 10
RB203	1-233-574-11	s	RESISTOR,CHIP NETWORK 10
RB204	1-233-574-11	s	RESISTOR,CHIP NETWORK 10
RB205	1-233-574-11	s	RESISTOR,CHIP NETWORK 10
RB206	1-233-574-11	s	RESISTOR,CHIP NETWORK 10
RB207	1-233-574-11	s	RESISTOR,CHIP NETWORK 10
RB401	1-233-576-11	s	RESISTOR,CHIP NETWORK 100
RB402	1-233-412-11	s	RESISTOR,CHIP NETWORK 1K
RB403	1-233-576-11	s	RESISTOR,CHIP NETWORK 100
RB404	1-233-576-11	s	RESISTOR,CHIP NETWORK 100
RB405	1-236-908-11	s	RESISTOR,NETWORK 10K (3216)
RB406	1-233-576-11	s	RESISTOR,CHIP NETWORK 100
RB407	1-233-576-11	s	RESISTOR,CHIP NETWORK 100
RB408	1-233-576-11	s	RESISTOR,CHIP NETWORK 100
RB409	1-233-576-11	s	RESISTOR,CHIP NETWORK 100
RB410	1-233-576-11	s	RESISTOR,CHIP NETWORK 100
RB411	1-233-576-11	s	RESISTOR,CHIP NETWORK 100
RB412	1-233-576-11	s	RESISTOR,CHIP NETWORK 100
RB413	1-233-576-11	s	RESISTOR,CHIP NETWORK 100
TH101	1-809-020-11	s	THERMISTOR
TP101	1-535-757-11	s	CHIP, CHECKER (CONNECTOR)
TP102	1-535-757-11	s	CHIP, CHECKER (CONNECTOR)
TP103	1-535-757-11	s	CHIP, CHECKER (CONNECTOR)
TP201	1-535-757-11	s	CHIP, CHECKER (CONNECTOR)
TP202	1-535-757-11	s	CHIP, CHECKER (CONNECTOR)
TP401	1-535-757-11	s	CHIP, CHECKER (CONNECTOR)
X201	1-767-908-11	s	VIBRATOR,CRYSTAL 13.08384MHz [For VPL-CS3]
	1-795-068-21	s	VIBRATOR,CRYSTAL 16.9344MHz [For VPL-CX2/CX3]
X301	1-795-260-21	s	OSCILLATOR, CRYSTAL
X401	1-781-659-11	s	VIBRATOR, CRYSTAL

C BOARD [For VPL-CS3]

Ref. No. or Q'ty	Part No.	SP	Description
1pc	A-1335-140-A	s	MOUNTED CIRCUIT BOARD, C
C101	1-131-998-21	s	CAPACITOR ELECT 82MF/6.3 V
C102	1-164-156-11	s	CAPACITOR,CERAMIC 0.1MF/25V F
C103	1-126-204-11	s	CAPACITOR,ELECT 47MF/16V(CHIP
C104	1-128-992-11	s	CAPACITOR ELECT 47MF 25V
C106	1-107-826-11	s	CAPACITOR,CHIP CERAMIC 0.1MF
C107	1-162-970-11	s	CAPACITOR CERAMIC 0.01MF/25V B
C108	1-162-970-11	s	CAPACITOR CERAMIC 0.01MF/25V B
C110	1-126-205-11	s	CAPACITOR,ELECT 47M/6.3V
C111	1-162-970-11	s	CAPACITOR CERAMIC 0.01MF/25V B
C112	1-107-826-11	s	CAPACITOR,CHIP CERAMIC 0.1MF
C113	1-107-826-11	s	CAPACITOR,CHIP CERAMIC 0.1MF
C114	1-126-205-11	s	CAPACITOR,ELECT 47M/6.3V
C115	1-107-826-11	s	CAPACITOR,CHIP CERAMIC 0.1MF
C116	1-107-826-11	s	CAPACITOR,CHIP CERAMIC 0.1MF
C117	1-164-156-11	s	CAPACITOR,CERAMIC 0.1MF/25V F
C118	1-126-205-11	s	CAPACITOR,ELECT 47M/6.3V
C119	1-107-826-11	s	CAPACITOR,CHIP CERAMIC 0.1MF
C122	1-164-156-11	s	CAPACITOR,CERAMIC 0.1MF/25V F
C123	1-107-826-11	s	CAPACITOR,CHIP CERAMIC 0.1MF
C124	1-128-995-11	s	CAPACITOR ELECT 100MF / 10 V
C201	1-107-826-11	s	CAPACITOR,CHIP CERAMIC 0.1MF
C202	1-109-982-11	s	CAPACITOR,CHIP CERAMIC 1MF/10V
C203	1-107-826-11	s	CAPACITOR,CHIP CERAMIC 0.1MF
C205	1-162-970-11	s	CAPACITOR CERAMIC 0.01MF/25V B
C206	1-107-826-11	s	CAPACITOR,CHIP CERAMIC 0.1MF
C207	1-107-826-11	s	CAPACITOR,CHIP CERAMIC 0.1MF
C208	1-107-826-11	s	CAPACITOR,CHIP CERAMIC 0.1MF
C209	1-107-826-11	s	CAPACITOR,CHIP CERAMIC 0.1MF
C210	1-107-826-11	s	CAPACITOR,CHIP CERAMIC 0.1MF
C211	1-107-826-11	s	CAPACITOR,CHIP CERAMIC 0.1MF
C212	1-107-826-11	s	CAPACITOR,CHIP CERAMIC 0.1MF
C213	1-107-826-11	s	CAPACITOR,CHIP CERAMIC 0.1MF
C214	1-107-826-11	s	CAPACITOR,CHIP CERAMIC 0.1MF
C215	1-126-205-11	s	CAPACITOR,ELECT 47M/6.3V
C216	1-107-826-11	s	CAPACITOR,CHIP CERAMIC 0.1MF
C217	1-107-826-11	s	CAPACITOR,CHIP CERAMIC 0.1MF
C218	1-162-910-11	s	CAPACITOR,CERAMIC 5PF/50V 1608
C219	1-126-205-11	s	CAPACITOR,ELECT 47M/6.3V
C220	1-107-826-11	s	CAPACITOR,CHIP CERAMIC 0.1MF
C221	1-107-826-11	s	CAPACITOR,CHIP CERAMIC 0.1MF
C222	1-107-826-11	s	CAPACITOR,CHIP CERAMIC 0.1MF
C301	1-162-970-11	s	CAPACITOR CERAMIC 0.01MF/25V B
C302	1-126-205-11	s	CAPACITOR,ELECT 47M/6.3V
C303	1-107-826-11	s	CAPACITOR,CHIP CERAMIC 0.1MF
C304	1-124-779-00	s	CAPACITOR,ELECT 10MF/16V
C305	1-162-970-11	s	CAPACITOR CERAMIC 0.01MF/25V B
C306	1-126-602-11	s	CAPACITOR,ELECT 3.3MF/50V(CHIP
C307	1-115-467-11	s	CAPACITOR CERAMIC 0.22MF/10V B
C308	1-107-826-11	s	CAPACITOR,CHIP CERAMIC 0.1MF
C309	1-124-779-00	s	CAPACITOR,ELECT 10MF/16V
C310	1-115-467-11	s	CAPACITOR CERAMIC 0.22MF/10V B
C311	1-162-970-11	s	CAPACITOR CERAMIC 0.01MF/25V B
C312	1-126-602-11	s	CAPACITOR,ELECT 3.3MF/50V(CHIP
C313	1-124-779-00	s	CAPACITOR,ELECT 10MF/16V
C314	1-107-826-11	s	CAPACITOR,CHIP CERAMIC 0.1MF
C315	1-162-970-11	s	CAPACITOR CERAMIC 0.01MF/25V B
C316	1-126-602-11	s	CAPACITOR,ELECT 3.3MF/50V(CHIP

(C BOARD) [VPL-CS3]

Ref. No. or Q'ty	Part No.	SP	Description
C317	1-162-970-11	s	CAPACITOR CERAMIC 0.01MF/25V B
C318	1-135-347-11	s	CAPACITOR, SOLID ELECT 82MF
C320	1-126-205-11	s	CAPACITOR,ELECT 47M/6.3V
C321	1-107-826-11	s	CAPACITOR,CHIP CERAMIC 0.1MF
C322	1-107-826-11	s	CAPACITOR,CHIP CERAMIC 0.1MF
C323	1-164-156-11	s	CAPACITOR,CERAMIC 0.1MF/25V F
C324	1-107-826-11	s	CAPACITOR,CHIP CERAMIC 0.1MF
C325	1-126-205-11	s	CAPACITOR,ELECT 47M/6.3V
C401	1-115-467-11	s	CAPACITOR CERAMIC 0.22MF/10V B
C402	1-107-826-11	s	CAPACITOR,CHIP CERAMIC 0.1MF
C404	1-107-826-11	s	CAPACITOR,CHIP CERAMIC 0.1MF
C407	1-107-826-11	s	CAPACITOR,CHIP CERAMIC 0.1MF
C408	1-127-760-11	s	CAPACITOR,CERAMIC 4.7MF/6.3V
C409	1-107-826-11	s	CAPACITOR,CHIP CERAMIC 0.1MF
C410	1-162-921-11	s	CAPACITOR,CERAMIC 33PF/50V CH
C411	1-107-826-11	s	CAPACITOR,CHIP CERAMIC 0.1MF
C412	1-164-156-11	s	CAPACITOR,CERAMIC 0.1MF/25V F
C414	1-107-826-11	s	CAPACITOR,CHIP CERAMIC 0.1MF
C415	1-107-826-11	s	CAPACITOR,CHIP CERAMIC 0.1MF
C416	1-128-992-11	s	CAPACITOR ELECT 47MF 25V
C417	1-164-156-11	s	CAPACITOR,CERAMIC 0.1MF/25V F
C419	1-128-992-11	s	CAPACITOR ELECT 47MF 25V
C420	1-164-156-11	s	CAPACITOR,CERAMIC 0.1MF/25V F
C421	1-162-970-11	s	CAPACITOR CERAMIC 0.01MF/25V B
C423	1-115-340-11	s	CAPACITOR CERAMIC 0.22MF/25V B
C424	1-164-156-11	s	CAPACITOR,CERAMIC 0.1MF/25V F
C425	1-164-156-11	s	CAPACITOR,CERAMIC 0.1MF/25V F
C426	1-164-156-11	s	CAPACITOR,CERAMIC 0.1MF/25V F
C427	1-117-681-11	s	CAPACITOR, ELECT 100MF/16V
C428	1-164-156-11	s	CAPACITOR,CERAMIC 0.1MF/25V F
C429	1-115-467-11	s	CAPACITOR CERAMIC 0.22MF/10V B
C430	1-115-467-11	s	CAPACITOR CERAMIC 0.22MF/10V B
C501	1-115-467-11	s	CAPACITOR CERAMIC 0.22MF/10V B
C502	1-107-826-11	s	CAPACITOR,CHIP CERAMIC 0.1MF
C504	1-107-826-11	s	CAPACITOR,CHIP CERAMIC 0.1MF
C507	1-107-826-11	s	CAPACITOR,CHIP CERAMIC 0.1MF
C508	1-127-760-11	s	CAPACITOR,CERAMIC 4.7MF/6.3V
C509	1-107-826-11	s	CAPACITOR,CHIP CERAMIC 0.1MF
C510	1-162-921-11	s	CAPACITOR,CERAMIC 33PF/50V CH
C511	1-107-826-11	s	CAPACITOR,CHIP CERAMIC 0.1MF
C512	1-164-156-11	s	CAPACITOR,CERAMIC 0.1MF/25V F
C514	1-107-826-11	s	CAPACITOR,CHIP CERAMIC 0.1MF
C515	1-107-826-11	s	CAPACITOR,CHIP CERAMIC 0.1MF
C516	1-128-992-11	s	CAPACITOR ELECT 47MF 25V
C517	1-164-156-11	s	CAPACITOR,CERAMIC 0.1MF/25V F
C519	1-128-992-11	s	CAPACITOR ELECT 47MF 25V
C520	1-164-156-11	s	CAPACITOR,CERAMIC 0.1MF/25V F
C521	1-164-156-11	s	CAPACITOR,CERAMIC 0.1MF/25V F
C522	1-164-156-11	s	CAPACITOR,CERAMIC 0.1MF/25V F
C523	1-117-681-11	s	CAPACITOR,ELECT 100MF/16V
C524	1-164-156-11	s	CAPACITOR,CERAMIC 0.1MF/25V F
C525	1-115-467-11	s	CAPACITOR CERAMIC 0.22MF/10V B
C526	1-115-467-11	s	CAPACITOR CERAMIC 0.22MF/10V B
C601	1-115-467-11	s	CAPACITOR CERAMIC 0.22MF/10V B
C602	1-107-826-11	s	CAPACITOR,CHIP CERAMIC 0.1MF
C604	1-107-826-11	s	CAPACITOR,CHIP CERAMIC 0.1MF
C607	1-107-826-11	s	CAPACITOR,CHIP CERAMIC 0.1MF
C608	1-127-760-11	s	CAPACITOR,CERAMIC 4.7MF/6.3V
C609	1-162-970-11	s	CAPACITOR CERAMIC 0.01MF/25V B

(C BOARD) [VPL-CS3]

Ref. No. or Q'ty	Part No.	SP	Description
C610	1-162-921-11	s	CAPACITOR,CERAMIC 33PF/50V CH
C611	1-107-826-11	s	CAPACITOR,CHIP CERAMIC 0.1MF
C612	1-164-156-11	s	CAPACITOR,CERAMIC 0.1MF/25V F
C614	1-107-826-11	s	CAPACITOR,CHIP CERAMIC 0.1MF
C615	1-107-826-11	s	CAPACITOR,CHIP CERAMIC 0.1MF
C616	1-128-992-11	s	CAPACITOR ELECT 47MF 25V
C617	1-164-156-11	s	CAPACITOR,CERAMIC 0.1MF/25V F
C619	1-128-992-11	s	CAPACITOR ELECT 47MF 25V
C620	1-164-156-11	s	CAPACITOR,CERAMIC 0.1MF/25V F
C621	1-164-156-11	s	CAPACITOR,CERAMIC 0.1MF/25V F
C622	1-164-156-11	s	CAPACITOR,CERAMIC 0.1MF/25V F
C623	1-117-681-11	s	CAPACITOR,ELECT 100MF/16V
C624	1-164-156-11	s	CAPACITOR,CERAMIC 0.1MF/25V F
C625	1-115-467-11	s	CAPACITOR CERAMIC 0.22MF/10V B
C626	1-115-467-11	s	CAPACITOR CERAMIC 0.22MF/10V B
C701	1-107-686-11	s	CAPACITOR,TANTALUM 4.7MF/16V
C702	1-107-686-11	s	CAPACITOR,TANTALUM 4.7MF/16V
C703	1-165-176-11	s	CAPACITOR,CERAMIC 47000PF/16V
C704	1-115-467-11	s	CAPACITOR CERAMIC 0.22MF/10V B
C705	1-107-826-11	s	CAPACITOR,CHIP CERAMIC 0.1MF
C706	1-162-970-11	s	CAPACITOR CERAMIC 0.01MF/25V B
C707	1-109-982-11	s	CAPACITOR,CHIP CERAMIC 1MF/10V
C708	1-124-779-00	s	CAPACITOR,ELECT 10MF/16V
C709	1-113-985-11	s	CAPACITOR,TANTALUM 10MF/20V
C710	1-109-982-11	s	CAPACITOR,CHIP CERAMIC 1MF/10V
C711	1-107-686-11	s	CAPACITOR,TANTALUM 4.7MF/16V
C712	1-126-204-11	s	CAPACITOR,ELECT 47MF/16V(CHIP
C713	1-107-826-11	s	CAPACITOR,CHIP CERAMIC 0.1MF
C714	1-107-686-11	s	CAPACITOR,TANTALUM 4.7MF/16V
C715	1-165-176-11	s	CAPACITOR,CERAMIC 47000PF/16V
C716	1-115-467-11	s	CAPACITOR CERAMIC 0.22MF/10V B
C717	1-135-342-11	s	CAPACITOR,SOLID ELECT 56MF
C718	1-107-826-11	s	CAPACITOR,CHIP CERAMIC 0.1MF
C719	1-162-970-11	s	CAPACITOR CERAMIC 0.01MF/25V B
C720	1-113-985-11	s	CAPACITOR,TANTALUM 10MF/20V
C721	1-162-970-11	s	CAPACITOR CERAMIC 0.01MF/25V B
C722	1-124-779-00	s	CAPACITOR,ELECT 10MF/16V
C723	1-165-176-11	s	CAPACITOR,CERAMIC 47000PF/16V
C724	1-165-176-11	s	CAPACITOR,CERAMIC 47000PF/16V
C726	1-135-347-11	s	CAPACITOR,SOLID ELECT 82MF
C727	1-107-826-11	s	CAPACITOR,CHIP CERAMIC 0.1MF
CN101	1-785-306-21	o	CONNECTOR,BOARD TO BOARD
CN102	1-770-620-21	s	PIN, CONNECTOR 3P
CN103	1-770-622-21	s	PIN, CONNECTOR 5P
CN104	1-785-306-21	o	CONNECTOR,BOARD TO BOARD
CN105	1-785-306-21	o	CONNECTOR,BOARD TO BOARD
CN106	1-770-619-11	o	PIN, CONNECTOR 2P
CN107	1-770-625-21	s	PIN, CONNECTOR 8P
CN108	1-580-055-21	o	PIN, CONNECTOR 2P
CN109	1-770-622-21	s	PIN, CONNECTOR 5P
CN110	1-778-965-21	s	PIN, CONNECTOR (PC BOARD) 12P
CN201	1-779-884-11	s	PLUG, CONNECTOR 4P
CN402	1-779-730-11	s	CONNECTOR, FFC/FPC (ZIF) 24P
CN502	1-779-730-11	s	CONNECTOR, FFC/FPC (ZIF) 24P
CN602	1-779-730-11	s	CONNECTOR, FFC/FPC (ZIF) 24P
CN701	1-770-625-21	s	PIN, CONNECTOR 8P
D102	8-719-073-11	s	DIODE BZA456A
D103	8-719-073-11	s	DIODE BZA456A

(C BOARD) [VPL-CS3]

Ref. No. or Q'ty	Part No.	SP	Description
D104	8-719-045-61	s	DIODE SEC1901C
D105	8-719-045-61	s	DIODE SEC1901C
D106	8-719-045-61	s	DIODE SEC1901C
D107	8-719-045-51	s	DIODE SEC2422C
D108	8-719-073-11	s	DIODE BZA456A
D201	8-719-914-43	s	DIODE DAN202K
D301	8-719-988-61	s	DIODE 1SS355TE-17
FB101	1-414-921-11	s	INDUCTOR, FERRITE BEAD
FB102	1-414-921-11	s	INDUCTOR, FERRITE BEAD
FB103	1-414-921-11	s	INDUCTOR, FERRITE BEAD
FB104	1-500-451-11	s	MICRO INDUCTOR (CHIP) 41P750S
FB105	1-414-921-11	s	INDUCTOR, FERRITE BEAD
FB106	1-414-921-11	s	INDUCTOR, FERRITE BEAD
FB107	1-414-921-11	s	INDUCTOR, FERRITE BEAD
FB108	1-414-921-11	s	INDUCTOR, FERRITE BEAD
FB109	1-414-921-11	s	INDUCTOR, FERRITE BEAD
FB110	1-414-921-11	s	INDUCTOR, FERRITE BEAD
FB111	1-414-921-11	s	INDUCTOR, FERRITE BEAD
FB112	1-414-921-11	s	INDUCTOR, FERRITE BEAD
FB113	1-414-921-11	s	INDUCTOR, FERRITE BEAD
FB114	1-414-921-11	s	INDUCTOR, FERRITE BEAD
FB119	1-500-451-11	s	MICRO INDUCTOR (CHIP) 41P750S
FB120	1-500-451-11	s	MICRO INDUCTOR (CHIP) 41P750S
FB121	1-500-451-11	s	MICRO INDUCTOR (CHIP) 41P750S
FB122	1-500-451-11	s	MICRO INDUCTOR (CHIP) 41P750S
FB123	1-500-451-11	s	MICRO INDUCTOR (CHIP) 41P750S
FB124	1-500-451-11	s	MICRO INDUCTOR (CHIP) 41P750S
FB201	1-414-921-11	s	INDUCTOR, FERRITE BEAD
FB202	1-414-921-11	s	INDUCTOR, FERRITE BEAD
FB206	1-414-921-11	s	INDUCTOR, FERRITE BEAD
FB208	1-414-921-11	s	INDUCTOR, FERRITE BEAD
FB301	1-414-921-11	s	INDUCTOR, FERRITE BEAD
FB302	1-414-921-11	s	INDUCTOR, FERRITE BEAD
FB303	1-414-921-11	s	INDUCTOR, FERRITE BEAD
FB401	1-414-921-11	s	INDUCTOR, FERRITE BEAD
FB402	1-414-921-11	s	INDUCTOR, FERRITE BEAD
FB403	1-414-921-11	s	INDUCTOR, FERRITE BEAD
FB405	1-414-921-11	s	INDUCTOR, FERRITE BEAD
FB501	1-414-921-11	s	INDUCTOR, FERRITE BEAD
FB502	1-414-921-11	s	INDUCTOR, FERRITE BEAD
FB503	1-414-921-11	s	INDUCTOR, FERRITE BEAD
FB601	1-414-921-11	s	INDUCTOR, FERRITE BEAD
FB602	1-414-921-11	s	INDUCTOR, FERRITE BEAD
FB603	1-414-921-11	s	INDUCTOR, FERRITE BEAD
FB701	1-414-921-11	s	INDUCTOR, FERRITE BEAD
FB702	1-414-921-11	s	INDUCTOR, FERRITE BEAD
FB703	1-414-921-11	s	INDUCTOR, FERRITE BEAD
IC101	8-759-388-31	s	IC PQ20VZ1U
IC102	8-759-460-81	s	IC BA12FP-E2
IC103	8-759-485-79	s	IC TC7SET08FU (TE85L)
IC104	8-759-447-77	s	IC TC7WH74FU (TE12R)
IC105	8-759-485-79	s	IC TC7SET08FU (TE85L)
IC106	8-759-582-37	s	IC PQ2TZ15U
IC107	8-759-533-85	s	IC L88M05T-FA-TL
IC201	8-759-824-29	s	IC CXD9607GB
IC202	8-759-475-43	s	IC TC74LCX125FT(EL)
IC203	8-759-449-58	s	IC LM7131BCM5X
IC204	8-759-472-59	s	IC 74VHC541MTCX

(C BOARD) [VPL-CS3]

Ref. No. or Q'ty	Part No.	SP	Description
IC205	8-759-472-59	s	IC 74VHC541MTCX
IC206	8-759-472-59	s	IC 74VHC541MTCX
IC207	8-759-544-01	s	IC S-80828ANNP-EDR-T2
IC208	————	s	IC M24C64-WMN6T(A)

Note If this IC has failed, replace the whole C board.

IC209	8-759-082-57	s	IC TC7W04FU
IC210	8-759-447-77	s	IC TC7WH74FU (TE12R)
IC301	8-759-645-13	s	IC ADV7123KST140
IC302	8-759-584-86	s	IC M52749FP-TP
IC303	8-759-571-03	s	IC LM4041DIM3-1.2(T&R)
IC304	8-759-542-46	s	IC M62392FP
IC401	8-752-093-18	s	IC CXA3512R-T6
IC403	8-759-252-41	s	IC TK11900MTL
IC501	8-752-093-18	s	IC CXA3512R-T6
IC601	8-752-093-18	s	IC CXA3512R-T6
IC701	8-759-702-02	s	IC NJM062M
IC702	8-759-702-02	s	IC NJM062M
IC703	8-752-091-06	s	IC CXA1846BN-T4
IC704	8-759-533-85	s	IC L88M05T-FA-TL
L201	1-469-525-91	s	INDUCTOR 10UH (NLFV25)
L301	1-469-525-91	s	INDUCTOR 10UH (NLFV25)
L302	1-469-525-91	s	INDUCTOR 10UH (NLFV25)
L303	1-469-525-91	s	INDUCTOR 10UH (NLFV25)
L304	1-469-525-91	s	INDUCTOR 10UH (NLFV25)
L305	1-469-525-91	s	INDUCTOR 10UH (NLFV25)
L401	1-410-369-11	s	INDUCTOR,CHIP 1UH (3225)
L402	1-410-369-11	s	INDUCTOR,CHIP 1UH (3225)
L501	1-410-369-11	s	INDUCTOR,CHIP 1UH (3225)
L502	1-410-369-11	s	INDUCTOR,CHIP 1UH (3225)
L601	1-410-369-11	s	INDUCTOR,CHIP 1UH (3225)
L602	1-410-369-11	s	INDUCTOR,CHIP 1UH (3225)
L701	1-412-028-11	s	INDUCTOR,CHIP 4.7UH (3225)
L702	1-412-028-11	s	INDUCTOR,CHIP 4.7UH (3225)
Q101	8-729-028-91	s	TRANSISTOR DTA144EUA-T106
Q201	8-729-230-49	s	TRANSISTOR 2SC2712-YG
Q202	8-729-026-49	s	TRANSISTOR 2SA1037AK-T146-R
Q203	8-729-202-38	s	TRANSISTOR 2SC3326N-A
Q204	8-729-202-38	s	TRANSISTOR 2SC3326N-A
Q301	8-729-112-65	s	TRANSISTOR 2SA1462
Q302	8-729-112-65	s	TRANSISTOR 2SA1462
Q303	8-729-112-65	s	TRANSISTOR 2SA1462
Q304	8-729-112-65	s	TRANSISTOR 2SA1462
Q401	8-729-013-28	s	TRANSISTOR HN1B01FU-TE85R
Q402	8-729-013-28	s	TRANSISTOR HN1B01FU-TE85R
Q501	8-729-013-28	s	TRANSISTOR HN1B01FU-TE85R
Q502	8-729-013-28	s	TRANSISTOR HN1B01FU-TE85R
Q601	8-729-013-28	s	TRANSISTOR HN1B01FU-TE85R
Q602	8-729-013-28	s	TRANSISTOR HN1B01FU-TE85R
Q701	8-729-907-00	s	TRANSISTOR DTC114EU
Q702	8-729-907-00	s	TRANSISTOR DTC114EU
Q703	8-729-013-28	s	TRANSISTOR HN1B01FU-TE85R
R101	1-216-864-11	s	RESISTOR,CHIP 0 1/16W (1608)
R102	1-216-833-11	s	RESISTOR,CHIP 10K 1/16W (1608)
R103	1-218-723-11	s	RESISTOR,CHIP 20K 1/16W(1608)
R104	1-218-714-11	s	RESISTOR,CHIP 8.2K 1/16W(1608)
R105	1-216-829-11	s	RESISTOR,CHIP 4.7K 1/16W(1608)
R106	1-218-685-11	s	RESISTOR,CHIP 510 1/16W
R107	1-218-692-11	s	RESISTOR,CHIP 1.0K 1/16W(1608)
R108	1-216-833-11	s	RESISTOR,CHIP 10K 1/16W (1608)

(C BOARD) [VPL-CS3]

Ref. No. or Q'ty	Part No.	SP	Description
R110	1-216-809-11	s	RESISTOR,CHIP 100 1/16W 1608
R111	1-218-692-11	s	RESISTOR,CHIP 1.0K 1/16W(1608)
R112	1-216-809-11	s	RESISTOR,CHIP 100 1/16W 1608
R113	1-216-809-11	s	RESISTOR,CHIP 100 1/16W 1608
R118	1-216-809-11	s	RESISTOR,CHIP 100 1/16W 1608
R119	1-216-809-11	s	RESISTOR,CHIP 100 1/16W 1608
R120	1-216-805-11	s	RESISTOR,CHIP 47 1/16W 1608
R121	1-216-805-11	s	RESISTOR,CHIP 47 1/16W 1608
R123	1-216-805-11	s	RESISTOR,CHIP 47 1/16W 1608
R125	1-216-805-11	s	RESISTOR,CHIP 47 1/16W 1608
R127	1-216-815-11	s	RESISTOR,CHIP 330 1/16W 1608
R128	1-216-815-11	s	RESISTOR,CHIP 330 1/16W 1608
R129	1-216-815-11	s	RESISTOR,CHIP 330 1/16W 1608
R130	1-216-815-11	s	RESISTOR,CHIP 330 1/16W 1608
R131	1-216-821-11	s	RESISTOR,CHIP 1.0K 1/16W(1608)
R132	1-216-815-11	s	RESISTOR,CHIP 330 1/16W 1608
R134	1-216-864-11	s	RESISTOR,CHIP 0 1/16W (1608)
R135	1-216-864-11	s	RESISTOR,CHIP 0 1/16W (1608)
R201	1-216-839-11	s	RESISTOR,CHIP 33K 1/16W 1608
R202	1-216-833-11	s	RESISTOR,CHIP 10K 1/16W (1608)
R203	1-216-809-11	s	RESISTOR,CHIP 100 1/16W 1608
R204	1-216-809-11	s	RESISTOR,CHIP 100 1/16W 1608
R205	1-216-809-11	s	RESISTOR,CHIP 100 1/16W 1608
R206	1-216-809-11	s	RESISTOR,CHIP 100 1/16W 1608
R207	1-216-809-11	s	RESISTOR,CHIP 100 1/16W 1608
R208	1-216-809-11	s	RESISTOR,CHIP 100 1/16W 1608
R209	1-216-841-11	s	RESISTOR,CHIP 47K 1/16W 1608
R210	1-216-821-11	s	RESISTOR,CHIP 1.0K 1/16W(1608)
R211	1-216-833-11	s	RESISTOR,CHIP 10K 1/16W (1608)
R212	1-216-828-11	s	RESISTOR,CHIP 3.9K 1/16W 1608
R213	1-216-828-11	s	RESISTOR,CHIP 3.9K 1/16W 1608
R214	1-216-805-11	s	RESISTOR,CHIP 47 1/16W 1608
R215	1-216-805-11	s	RESISTOR,CHIP 47 1/16W 1608
R216	1-216-805-11	s	RESISTOR,CHIP 47 1/16W 1608
R217	1-216-805-11	s	RESISTOR,CHIP 47 1/16W 1608
R218	1-216-805-11	s	RESISTOR,CHIP 47 1/16W 1608
R219	1-216-805-11	s	RESISTOR,CHIP 47 1/16W 1608
R220	1-216-829-11	s	RESISTOR,CHIP 4.7K 1/16W(1608)
R221	1-216-829-11	s	RESISTOR,CHIP 4.7K 1/16W(1608)
R222	1-216-825-11	s	RESISTOR,CHIP 2.2K 1/16W 1608
R223	1-216-825-11	s	RESISTOR,CHIP 2.2K 1/16W 1608
R224	1-216-805-11	s	RESISTOR,CHIP 47 1/16W 1608
R225	1-216-805-11	s	RESISTOR,CHIP 47 1/16W 1608
R226	1-216-845-11	s	RESISTOR,CHIP 100K 1/16W(1608)
R227	1-216-845-11	s	RESISTOR,CHIP 100K 1/16W(1608)
R228	1-216-817-11	s	RESISTOR,CHIP 470 1/16W 1608
R229	1-216-805-11	s	RESISTOR,CHIP 47 1/16W 1608
R230	1-216-814-11	s	RESISTOR,CHIP 270 1/16W 1608
R231	1-216-864-11	s	RESISTOR,CHIP 0 1/16W (1608)
R233	1-216-864-11	s	RESISTOR,CHIP 0 1/16W (1608)
R234	1-216-864-11	s	RESISTOR,CHIP 0 1/16W (1608)
R235	1-216-833-11	s	RESISTOR,CHIP 10K 1/16W (1608)
R236	1-216-833-11	s	RESISTOR,CHIP 10K 1/16W (1608)
R238	1-216-864-11	s	RESISTOR,CHIP 0 1/16W (1608)
R239	1-216-864-11	s	RESISTOR,CHIP 0 1/16W (1608)
R241	1-216-864-11	s	RESISTOR,CHIP 0 1/16W (1608)
R301	1-216-809-11	s	RESISTOR,CHIP 100 1/16W 1608
R302	1-216-809-11	s	RESISTOR,CHIP 100 1/16W 1608
R303	1-216-816-11	s	RESISTOR,CHIP 390 1/16W 1608

(C BOARD) [VPL-CS3]

Ref. No. or Q'ty	Part No.	SP	Description
R304	1-216-809-11	s	RESISTOR,CHIP 100 1/16W 1608
R305	1-216-808-11	s	RESISTOR,CHIP 82 1/16W 1608
R306	1-216-841-11	s	RESISTOR,CHIP 47K 1/16W 1608
R307	1-216-819-11	s	RESISTOR,CHIP 680 1/16W 1608
R309	1-218-665-11	s	RESISTOR,CHIP 75 1/16W (1608)
R310	1-216-057-00	s	RESISTOR CHIP 2.2K 1/10W(2012)
R311	1-216-057-00	s	RESISTOR CHIP 2.2K 1/10W(2012)
R312	1-216-797-11	s	RESISTOR,CHIP 10 1/16W 1608
R313	1-216-833-11	s	RESISTOR,CHIP 10K 1/16W (1608)
R314	1-216-816-11	s	RESISTOR,CHIP 390 1/16W 1608
R315	1-216-853-11	s	RESISTOR,CHIP 470K 1/16W(1608)
R317	1-216-808-11	s	RESISTOR,CHIP 82 1/16W 1608
R318	1-216-797-11	s	RESISTOR,CHIP 10 1/16W 1608
R319	1-218-665-11	s	RESISTOR,CHIP 75 1/16W (1608)
R320	1-216-819-11	s	RESISTOR,CHIP 680 1/16W 1608
R322	1-216-057-00	s	RESISTOR CHIP 2.2K 1/10W(2012)
R323	1-216-057-00	s	RESISTOR CHIP 2.2K 1/10W(2012)
R324	1-216-797-11	s	RESISTOR,CHIP 10 1/16W 1608
R325	1-216-816-11	s	RESISTOR,CHIP 390 1/16W 1608
R326	1-218-665-11	s	RESISTOR,CHIP 75 1/16W (1608)
R327	1-216-819-11	s	RESISTOR,CHIP 680 1/16W 1608
R328	1-216-808-11	s	RESISTOR,CHIP 82 1/16W 1608
R329	1-216-057-00	s	RESISTOR CHIP 2.2K 1/10W(2012)
R330	1-216-057-00	s	RESISTOR CHIP 2.2K 1/10W(2012)
R331	1-218-688-11	s	RESISTOR,CHIP 680 1/16W(1608)
R332	1-216-809-11	s	RESISTOR,CHIP 100 1/16W 1608
R333	1-216-827-11	s	RESISTOR,CHIP 3.3K 1/16W 1608
R334	1-216-809-11	s	RESISTOR,CHIP 100 1/16W 1608
R335	1-216-809-11	s	RESISTOR,CHIP 100 1/16W 1608
R336	1-218-710-11	s	RESISTOR,CHIP 5.6K 1/16W(1608)
R337	1-218-716-11	s	RESISTOR,CHIP 10K 1/16W(1608)
R338	1-216-805-11	s	RESISTOR,CHIP 47 1/16W 1608
R339	1-216-805-11	s	RESISTOR,CHIP 47 1/16W 1608
R340	1-216-805-11	s	RESISTOR,CHIP 47 1/16W 1608
R341	1-216-805-11	s	RESISTOR,CHIP 47 1/16W 1608
R342	1-216-805-11	s	RESISTOR,CHIP 47 1/16W 1608
R404	1-218-699-11	s	RESISTOR,CHIP 2.0K 1/16W(1608)
R405	1-216-805-11	s	RESISTOR,CHIP 47 1/16W 1608
R406	1-218-706-11	s	RESISTOR,CHIP 3.9K 1/16W(1608)
R407	1-216-864-11	s	RESISTOR,CHIP 0 1/16W (1608)
R409	1-216-864-11	s	RESISTOR,CHIP 0 1/16W (1608)
R411	1-216-809-11	s	RESISTOR,CHIP 100 1/16W 1608
R417	1-216-864-11	s	RESISTOR,CHIP 0 1/16W (1608)
R418	1-216-864-11	s	RESISTOR,CHIP 0 1/16W (1608)
R421	1-216-864-11	s	RESISTOR,CHIP 0 1/16W (1608)
R422	1-216-864-11	s	RESISTOR,CHIP 0 1/16W (1608)
R423	1-216-864-11	s	RESISTOR,CHIP 0 1/16W (1608)
R424	1-216-864-11	s	RESISTOR,CHIP 0 1/16W (1608)
R425	1-216-809-11	s	RESISTOR,CHIP 100 1/16W 1608
R426	1-216-825-11	s	RESISTOR,CHIP 2.2K 1/16W 1608
R427	1-216-825-11	s	RESISTOR,CHIP 2.2K 1/16W 1608
R428	1-218-720-11	s	RESISTOR,CHIP 15K 1/16W(1608)
R429	1-216-789-11	s	RESISTOR,CHIP 2.2 1/16W(1608)
R430	1-216-789-11	s	RESISTOR,CHIP 2.2 1/16W(1608)
R431	1-216-864-11	s	RESISTOR,CHIP 0 1/16W (1608)
R432	1-218-744-11	s	RESISTOR,CHIP 150K 1/16W
R434	1-216-833-11	s	RESISTOR,CHIP 10K 1/16W (1608)
R436	1-218-699-11	s	RESISTOR,CHIP 2.0K 1/16W(1608)
R437	1-218-706-11	s	RESISTOR,CHIP 3.9K 1/16W(1608)

(C BOARD) [VPL-CS3]

Ref. No. or Q'ty	Part No.	SP	Description
R504	1-216-805-11	s	RESISTOR,CHIP 47 1/16W 1608
R505	1-218-699-11	s	RESISTOR,CHIP 2.0K 1/16W(1608)
R506	1-218-706-11	s	RESISTOR,CHIP 3.9K 1/16W(1608)
R509	1-216-864-11	s	RESISTOR,CHIP 0 1/16W (1608)
R511	1-216-809-11	s	RESISTOR,CHIP 100 1/16W 1608
R517	1-216-864-11	s	RESISTOR,CHIP 0 1/16W (1608)
R518	1-216-864-11	s	RESISTOR,CHIP 0 1/16W (1608)
R521	1-216-864-11	s	RESISTOR,CHIP 0 1/16W (1608)
R522	1-216-864-11	s	RESISTOR,CHIP 0 1/16W (1608)
R523	1-216-864-11	s	RESISTOR,CHIP 0 1/16W (1608)
R524	1-216-864-11	s	RESISTOR,CHIP 0 1/16W (1608)
R525	1-216-809-11	s	RESISTOR,CHIP 100 1/16W 1608
R526	1-216-825-11	s	RESISTOR,CHIP 2.2K 1/16W 1608
R527	1-216-825-11	s	RESISTOR,CHIP 2.2K 1/16W 1608
R528	1-216-789-11	s	RESISTOR,CHIP 2.2 1/16W(1608)
R529	1-216-789-11	s	RESISTOR,CHIP 2.2 1/16W(1608)
R530	1-216-864-11	s	RESISTOR,CHIP 0 1/16W (1608)
R532	1-216-833-11	s	RESISTOR,CHIP 10K 1/16W (1608)
R534	1-218-699-11	s	RESISTOR,CHIP 2.0K 1/16W(1608)
R535	1-218-706-11	s	RESISTOR,CHIP 3.9K 1/16W(1608)
R604	1-218-699-11	s	RESISTOR,CHIP 2.0K 1/16W(1608)
R605	1-216-805-11	s	RESISTOR,CHIP 47 1/16W 1608
R606	1-218-706-11	s	RESISTOR,CHIP 3.9K 1/16W(1608)
R609	1-216-864-11	s	RESISTOR,CHIP 0 1/16W (1608)
R611	1-216-809-11	s	RESISTOR,CHIP 100 1/16W 1608
R617	1-216-864-11	s	RESISTOR,CHIP 0 1/16W (1608)
R618	1-216-864-11	s	RESISTOR,CHIP 0 1/16W (1608)
R621	1-216-864-11	s	RESISTOR,CHIP 0 1/16W (1608)
R622	1-216-864-11	s	RESISTOR,CHIP 0 1/16W (1608)
R623	1-216-864-11	s	RESISTOR,CHIP 0 1/16W (1608)
R624	1-216-864-11	s	RESISTOR,CHIP 0 1/16W (1608)
R625	1-216-809-11	s	RESISTOR,CHIP 100 1/16W 1608
R626	1-216-825-11	s	RESISTOR,CHIP 2.2K 1/16W 1608
R627	1-216-825-11	s	RESISTOR,CHIP 2.2K 1/16W 1608
R628	1-216-789-11	s	RESISTOR,CHIP 2.2 1/16W(1608)
R629	1-216-789-11	s	RESISTOR,CHIP 2.2 1/16W(1608)
R630	1-216-864-11	s	RESISTOR,CHIP 0 1/16W (1608)
R632	1-216-833-11	s	RESISTOR,CHIP 10K 1/16W (1608)
R634	1-218-699-11	s	RESISTOR,CHIP 2.0K 1/16W(1608)
R635	1-218-706-11	s	RESISTOR,CHIP 3.9K 1/16W(1608)
R701	1-216-833-11	s	RESISTOR,CHIP 10K 1/16W (1608)
R702	1-217-671-11	s	RESISTOR CHIP 1 1/10W(2125)
R703	1-216-841-11	s	RESISTOR,CHIP 47K 1/16W 1608
R704	1-216-824-11	s	RESISTOR,CHIP 1.8K 1/16W 1608
R705	1-216-841-11	s	RESISTOR,CHIP 47K 1/16W 1608
R706	1-216-814-11	s	RESISTOR,CHIP 270 1/16W 1608
R707	1-216-864-11	s	RESISTOR,CHIP 0 1/16W (1608)
R709	1-216-864-11	s	RESISTOR,CHIP 0 1/16W (1608)
R710	1-216-833-11	s	RESISTOR,CHIP 10K 1/16W (1608)
R711	1-216-841-11	s	RESISTOR,CHIP 47K 1/16W 1608
R712	1-217-671-11	s	RESISTOR CHIP 1 1/10W(2125)
R713	1-216-841-11	s	RESISTOR,CHIP 47K 1/16W 1608
R714	1-216-824-11	s	RESISTOR,CHIP 1.8K 1/16W 1608
R715	1-216-829-11	s	RESISTOR,CHIP 4.7K 1/16W(1608)
R716	1-216-864-11	s	RESISTOR,CHIP 0 1/16W (1608)
R718	1-216-864-11	s	RESISTOR,CHIP 0 1/16W (1608)
R719	1-216-809-11	s	RESISTOR,CHIP 100 1/16W 1608
R720	1-216-809-11	s	RESISTOR,CHIP 100 1/16W 1608
R721	1-216-809-11	s	RESISTOR,CHIP 100 1/16W 1608

(C BOARD) [VPL-CS3]

Ref. No. or Q'ty	Part No.	SP	Description
R722	1-216-823-11	s	RESISTOR,CHIP 1.5K 1/16W
R723	1-216-827-11	s	RESISTOR,CHIP 3.3K 1/16W 1608
R724	1-216-845-11	s	RESISTOR,CHIP 100K 1/16W(1608)
R725	1-216-833-11	s	RESISTOR,CHIP 10K 1/16W (1608)
R726	1-216-829-11	s	RESISTOR,CHIP 4.7K 1/16W(1608)
R727	1-216-829-11	s	RESISTOR,CHIP 4.7K 1/16W(1608)
R728	1-216-829-11	s	RESISTOR,CHIP 4.7K 1/16W(1608)
R729	1-216-814-11	s	RESISTOR,CHIP 270 1/16W 1608
RB101	1-233-576-11	s	RESISTOR,CHIP NETWORK 100
RB102	1-233-576-11	s	RESISTOR,CHIP NETWORK 100
RB103	1-233-576-11	s	RESISTOR,CHIP NETWORK 100
RB104	1-233-576-11	s	RESISTOR,CHIP NETWORK 100
RB201	1-233-576-11	s	RESISTOR,CHIP NETWORK 100
RB202	1-233-576-11	s	RESISTOR,CHIP NETWORK 100
RB203	1-233-576-11	s	RESISTOR,CHIP NETWORK 100
RB204	1-233-576-11	s	RESISTOR,CHIP NETWORK 100
RB205	1-233-576-11	s	RESISTOR,CHIP NETWORK 100
RB206	1-233-576-11	s	RESISTOR,CHIP NETWORK 100
RB207	1-233-575-11	s	RESISTOR,CHIP NETWORK 22
RB208	1-233-575-11	s	RESISTOR,CHIP NETWORK 22
RB209	1-233-388-11	s	FILTER, BAND PASS
RB210	1-233-388-11	s	FILTER, BAND PASS
RB211	1-233-575-11	s	RESISTOR,CHIP NETWORK 22
RB212	1-233-575-11	s	RESISTOR,CHIP NETWORK 22
RB301	1-233-576-11	s	RESISTOR,CHIP NETWORK 100
RB302	1-233-576-11	s	RESISTOR,CHIP NETWORK 100
RB303	1-233-576-11	s	RESISTOR,CHIP NETWORK 100
S201	1-571-674-11	s	SWITCH,SLIDE (2-2-2)
TH101	1-808-656-11	s	THERMISTOR
TP103	1-535-757-11	s	CHIP, CHECKER (CONNECTOR)
TP104	1-535-757-11	s	CHIP, CHECKER (CONNECTOR)
TP108	1-535-757-11	s	CHIP, CHECKER (CONNECTOR)
TP109	1-535-757-11	s	CHIP, CHECKER (CONNECTOR)
TP110	1-535-757-11	s	CHIP, CHECKER (CONNECTOR)
TP111	1-535-757-11	s	CHIP, CHECKER (CONNECTOR)
TP112	1-535-757-11	s	CHIP, CHECKER (CONNECTOR)
TP113	1-535-757-11	s	CHIP, CHECKER (CONNECTOR)
TP115	1-535-757-11	s	CHIP, CHECKER (CONNECTOR)
TP116	1-535-757-11	s	CHIP, CHECKER (CONNECTOR)
TP117	1-535-757-11	s	CHIP, CHECKER (CONNECTOR)
TP201	1-535-757-11	s	CHIP, CHECKER (CONNECTOR)
TP202	1-535-757-11	s	CHIP, CHECKER (CONNECTOR)
TP203	1-535-757-11	s	CHIP, CHECKER (CONNECTOR)
TP204	1-535-757-11	s	CHIP, CHECKER (CONNECTOR)
TP205	1-535-757-11	s	CHIP, CHECKER (CONNECTOR)
TP206	1-535-757-11	s	CHIP, CHECKER (CONNECTOR)
TP207	1-535-757-11	s	CHIP, CHECKER (CONNECTOR)
TP208	1-535-757-11	s	CHIP, CHECKER (CONNECTOR)
TP209	1-535-757-11	s	CHIP, CHECKER (CONNECTOR)
TP210	1-535-757-11	s	CHIP, CHECKER (CONNECTOR)
TP211	1-535-757-11	s	CHIP, CHECKER (CONNECTOR)
TP212	1-535-757-11	s	CHIP, CHECKER (CONNECTOR)
TP213	1-535-757-11	s	CHIP, CHECKER (CONNECTOR)
TP301	1-535-757-11	s	CHIP, CHECKER (CONNECTOR)
TP302	1-535-757-11	s	CHIP, CHECKER (CONNECTOR)
TP303	1-535-757-11	s	CHIP, CHECKER (CONNECTOR)
TP304	1-535-757-11	s	CHIP, CHECKER (CONNECTOR)

(C BOARD) [VPL-CS3]

Ref. No. or Q'ty	Part No.	SP	Description
TP401	1-535-757-11	s	CHIP, CHECKER (CONNECTOR)
TP402	1-535-757-11	s	CHIP, CHECKER (CONNECTOR)
TP403	1-535-757-11	s	CHIP, CHECKER (CONNECTOR)
TP406	1-535-757-11	s	CHIP, CHECKER (CONNECTOR)
TP501	1-535-757-11	s	CHIP, CHECKER (CONNECTOR)
TP502	1-535-757-11	s	CHIP, CHECKER (CONNECTOR)
TP505	1-535-757-11	s	CHIP, CHECKER (CONNECTOR)
TP601	1-535-757-11	s	CHIP, CHECKER (CONNECTOR)
TP602	1-535-757-11	s	CHIP, CHECKER (CONNECTOR)
TP605	1-535-757-11	s	CHIP, CHECKER (CONNECTOR)
TP701	1-535-757-11	s	CHIP, CHECKER (CONNECTOR)
TP702	1-535-757-11	s	CHIP, CHECKER (CONNECTOR)

C BOARD [For VPL-CX2/VPL-CX3]

Ref. No. or Q'ty	Part No.	SP	Description
1pc	A-1335-145-A	s	MOUNTED CIRCUIT BOARD, C
C101	1-131-998-11	s	CAPACITOR,SOLID ELECT 82MF 6.3 V
C102	1-164-156-11	s	CAPACITOR,CERAMIC 0.1MF/25V F
C103	1-126-204-11	s	CAPACITOR,ELECT 47MF/16V(CHIP
C104	1-128-992-11	s	CAPACITOR ELECT 47MF 25V
C106	1-107-826-11	s	CAPACITOR,CHIP CERAMIC 0.1MF
C107	1-162-970-11	s	CAPACITOR,CERAMIC 0.01MF/25V B
C108	1-162-970-11	s	CAPACITOR,CERAMIC 0.01MF/25V B
C110	1-126-205-11	s	CAPACITOR,ELECT 47M/6.3
C111	1-162-970-11	s	CAPACITOR,CERAMIC 0.01MF/25V B
C112	1-107-826-11	s	CAPACITOR,CHIP CERAMIC 0.1MF
C113	1-107-826-11	s	CAPACITOR,CHIP CERAMIC 0.1MF
C114	1-126-205-11	s	CAPACITOR,ELECT 47M/6.3
C115	1-107-826-11	s	CAPACITOR,CHIP CERAMIC 0.1MF
C116	1-107-826-11	s	CAPACITOR,CHIP CERAMIC 0.1MF
C117	1-164-156-11	s	CAPACITOR,CERAMIC 0.1MF/25V F
C118	1-126-205-11	s	CAPACITOR,ELECT 47M/6.3
C119	1-107-826-11	s	CAPACITOR,CHIP CERAMIC 0.1MF
C122	1-164-156-11	s	CAPACITOR,CERAMIC 0.1MF/25V F
C123	1-107-826-11	s	CAPACITOR,CHIP CERAMIC 0.1MF
C124	1-128-995-11	s	CAPACITOR,ELECT 100MF / 10 V
C201	1-107-826-11	s	CAPACITOR,CHIP CERAMIC 0.1MF
C202	1-109-982-11	s	CAPACITOR,CHIP CERAMIC 1MF/10V
C203	1-107-826-11	s	CAPACITOR,CHIP CERAMIC 0.1MF
C205	1-162-970-11	s	CAPACITOR CERAMIC 0.01MF/25V B
C206	1-107-826-11	s	CAPACITOR,CHIP CERAMIC 0.1MF
C207	1-107-826-11	s	CAPACITOR,CHIP CERAMIC 0.1MF
C208	1-107-826-11	s	CAPACITOR,CHIP CERAMIC 0.1MF
C209	1-107-826-11	s	CAPACITOR,CHIP CERAMIC 0.1MF
C210	1-107-826-11	s	CAPACITOR,CHIP CERAMIC 0.1MF
C211	1-107-826-11	s	CAPACITOR,CHIP CERAMIC 0.1MF
C212	1-107-826-11	s	CAPACITOR,CHIP CERAMIC 0.1MF
C213	1-107-826-11	s	CAPACITOR,CHIP CERAMIC 0.1MF
C214	1-107-826-11	s	CAPACITOR,CHIP CERAMIC 0.1MF
C215	1-126-205-11	s	CAPACITOR,ELECT 47M/6.3
C216	1-107-826-11	s	CAPACITOR,CHIP CERAMIC 0.1MF
C217	1-107-826-11	s	CAPACITOR,CHIP CERAMIC 0.1MF
C218	1-162-910-11	s	CAPACITOR,CERAMIC 5PF/50V 1608
C219	1-126-205-11	s	CAPACITOR,ELECT 47M/6.3
C220	1-107-826-11	s	CAPACITOR,CHIP CERAMIC 0.1MF
C221	1-107-826-11	s	CAPACITOR,CHIP CERAMIC 0.1MF
C222	1-107-826-11	s	CAPACITOR,CHIP CERAMIC 0.1MF
C301	1-162-970-11	s	CAPACITOR CERAMIC 0.01MF/25V B
C302	1-126-205-11	s	CAPACITOR,ELECT 47M/6.3
C303	1-107-826-11	s	CAPACITOR,CHIP CERAMIC 0.1MF
C304	1-124-779-00	s	CAPACITOR,ELECT 10MF/16V
C305	1-162-970-11	s	CAPACITOR CERAMIC 0.01MF/25V B
C306	1-126-602-11	s	CAPACITOR,ELECT 3.3MF/50V(CHIP
C307	1-115-467-11	s	CAPACITOR CERAMIC 0.22MF/10V B
C308	1-107-826-11	s	CAPACITOR,CHIP CERAMIC 0.1MF
C309	1-124-779-00	s	CAPACITOR,ELECT 10MF/16V
C310	1-115-467-11	s	CAPACITOR CERAMIC 0.22MF/10V B
C311	1-162-970-11	s	CAPACITOR CERAMIC 0.01MF/25V B
C312	1-126-602-11	s	CAPACITOR,ELECT 3.3MF/50V(CHIP
C313	1-124-779-00	s	CAPACITOR,ELECT 10MF/16V
C314	1-107-826-11	s	CAPACITOR,CHIP CERAMIC 0.1MF
C315	1-162-970-11	s	CAPACITOR CERAMIC 0.01MF/25V B
C316	1-126-602-11	s	CAPACITOR,ELECT 3.3MF/50V(CHIP

(C BOARD) [VPL-CX2/CX3]

Ref. No. or Q'ty	Part No.	SP	Description
C317	1-162-970-11	s	CAPACITOR CERAMIC 0.01MF/25V B
C318	1-135-347-11	s	CAPACITOR,SOLID ELECT 82MF
C320	1-126-205-11	s	CAPACITOR,ELECT 47M/6.3
C321	1-107-826-11	s	CAPACITOR,CHIP CERAMIC 0.1MF
C322	1-107-826-11	s	CAPACITOR,CHIP CERAMIC 0.1MF
C323	1-164-156-11	s	CAPACITOR,CERAMIC 0.1MF/25V F
C324	1-107-826-11	s	CAPACITOR,CHIP CERAMIC 0.1MF
C325	1-126-205-11	s	CAPACITOR,ELECT 47M/6.3
C401	1-115-467-11	s	CAPACITOR CERAMIC 0.22MF/10V B
C402	1-107-826-11	s	CAPACITOR,CHIP CERAMIC 0.1MF
C403	1-107-826-11	s	CAPACITOR,CHIP CERAMIC 0.1MF
C404	1-107-826-11	s	CAPACITOR,CHIP CERAMIC 0.1MF
C405	1-127-760-11	s	CAPACITOR,CERAMIC 4.7MF/6.3V
C406	1-107-826-11	s	CAPACITOR,CHIP CERAMIC 0.1MF
C407	1-107-826-11	s	CAPACITOR,CHIP CERAMIC 0.1MF
C408	1-127-760-11	s	CAPACITOR,CERAMIC 4.7MF/6.3V
C409	1-107-826-11	s	CAPACITOR,CHIP CERAMIC 0.1MF
C410	1-162-921-11	s	CAPACITOR,CERAMIC 33PF/50V CH
C411	1-107-826-11	s	CAPACITOR,CHIP CERAMIC 0.1MF
C412	1-164-156-11	s	CAPACITOR,CERAMIC 0.1MF/25V F
C413	1-164-156-11	s	CAPACITOR,CERAMIC 0.1MF/25V F
C414	1-107-826-11	s	CAPACITOR,CHIP CERAMIC 0.1MF
C415	1-107-826-11	s	CAPACITOR,CHIP CERAMIC 0.1MF
C416	1-128-992-11	s	CAPACITOR ELECT 47MF 25V
C417	1-164-156-11	s	CAPACITOR,CERAMIC 0.1MF/25V F
C418	1-164-156-11	s	CAPACITOR,CERAMIC 0.1MF/25V F
C419	1-128-992-11	s	CAPACITOR ELECT 47MF 25V
C420	1-164-156-11	s	CAPACITOR,CERAMIC 0.1MF/25V F
C421	1-162-970-11	s	CAPACITOR CERAMIC 0.01MF/25V B
C423	1-115-340-11	s	CAPACITOR CERAMIC 0.22MF/25V B
C424	1-164-156-11	s	CAPACITOR,CERAMIC 0.1MF/25V F
C425	1-164-156-11	s	CAPACITOR,CERAMIC 0.1MF/25V F
C426	1-164-156-11	s	CAPACITOR,CERAMIC 0.1MF/25V F
C427	1-117-681-11	s	CAPACITOR,ELECT 100MF/16V
C428	1-164-156-11	s	CAPACITOR,CERAMIC 0.1MF/25V F
C429	1-115-467-11	s	CAPACITOR CERAMIC 0.22MF/10V B
C430	1-115-467-11	s	CAPACITOR CERAMIC 0.22MF/10V B
C431	1-115-467-11	s	CAPACITOR CERAMIC 0.22MF/10V B
C432	1-115-467-11	s	CAPACITOR CERAMIC 0.22MF/10V B
C501	1-115-467-11	s	CAPACITOR CERAMIC 0.22MF/10V B
C502	1-107-826-11	s	CAPACITOR,CHIP CERAMIC 0.1MF
C503	1-107-826-11	s	CAPACITOR,CHIP CERAMIC 0.1MF
C504	1-107-826-11	s	CAPACITOR,CHIP CERAMIC 0.1MF
C505	1-127-760-11	s	CAPACITOR,CERAMIC 4.7MF/6.3V
C506	1-107-826-11	s	CAPACITOR,CHIP CERAMIC 0.1MF
C507	1-107-826-11	s	CAPACITOR,CHIP CERAMIC 0.1MF
C508	1-127-760-11	s	CAPACITOR,CERAMIC 4.7MF/6.3V
C509	1-107-826-11	s	CAPACITOR,CHIP CERAMIC 0.1MF
C510	1-162-921-11	s	CAPACITOR,CERAMIC 33PF/50V CH
C511	1-107-826-11	s	CAPACITOR,CHIP CERAMIC 0.1MF
C512	1-164-156-11	s	CAPACITOR,CERAMIC 0.1MF/25V F
C513	1-164-156-11	s	CAPACITOR,CERAMIC 0.1MF/25V F
C514	1-107-826-11	s	CAPACITOR,CHIP CERAMIC 0.1MF
C515	1-107-826-11	s	CAPACITOR,CHIP CERAMIC 0.1MF
C516	1-128-992-11	s	CAPACITOR,ELECT 47MF 25V
C517	1-164-156-11	s	CAPACITOR,CERAMIC 0.1MF/25V F
C518	1-164-156-11	s	CAPACITOR,CERAMIC 0.1MF/25V F
C519	1-128-992-11	s	CAPACITOR,ELECT 47MF 25V
C520	1-164-156-11	s	CAPACITOR,CERAMIC 0.1MF/25V F

(C BOARD) [VPL-CX2/CX3]

Ref. No. or Q'ty	Part No.	SP	Description
C521	1-164-156-11	s	CAPACITOR,CERAMIC 0.1MF/25V F
C522	1-164-156-11	s	CAPACITOR,CERAMIC 0.1MF/25V F
C523	1-117-681-11	s	CAPACITOR,ELECT 100MF/16V
C524	1-164-156-11	s	CAPACITOR,CERAMIC 0.1MF/25V F
C525	1-115-467-11	s	CAPACITOR,CERAMIC 0.22MF/10V B
C526	1-115-467-11	s	CAPACITOR,CERAMIC 0.22MF/10V B
C527	1-115-467-11	s	CAPACITOR,CERAMIC 0.22MF/10V B
C528	1-115-467-11	s	CAPACITOR,CERAMIC 0.22MF/10V B
C601	1-115-467-11	s	CAPACITOR,CERAMIC 0.22MF/10V B
C602	1-107-826-11	s	CAPACITOR,CHIP CERAMIC 0.1MF
C603	1-107-826-11	s	CAPACITOR,CHIP CERAMIC 0.1MF
C604	1-107-826-11	s	CAPACITOR,CHIP CERAMIC 0.1MF
C605	1-127-760-11	s	CAPACITOR,CERAMIC 4.7MF/6.3V
C606	1-107-826-11	s	CAPACITOR,CHIP CERAMIC 0.1MF
C607	1-107-826-11	s	CAPACITOR,CHIP CERAMIC 0.1MF
C608	1-127-760-11	s	CAPACITOR,CERAMIC 4.7MF/6.3V
C609	1-162-970-11	s	CAPACITOR CERAMIC 0.01MF/25V B
C610	1-162-921-11	s	CAPACITOR,CERAMIC 33PF/50V CH
C611	1-107-826-11	s	CAPACITOR,CHIP CERAMIC 0.1MF
C612	1-164-156-11	s	CAPACITOR,CERAMIC 0.1MF/25V F
C613	1-164-156-11	s	CAPACITOR,CERAMIC 0.1MF/25V F
C614	1-107-826-11	s	CAPACITOR,CHIP CERAMIC 0.1MF
C615	1-107-826-11	s	CAPACITOR,CHIP CERAMIC 0.1MF
C616	1-128-992-11	s	CAPACITOR,ELECT 47MF 25V
C617	1-164-156-11	s	CAPACITOR,CERAMIC 0.1MF/25V F
C618	1-164-156-11	s	CAPACITOR,CERAMIC 0.1MF/25V F
C619	1-128-992-11	s	CAPACITOR,ELECT 47MF 25V
C620	1-164-156-11	s	CAPACITOR,CERAMIC 0.1MF/25V F
C621	1-164-156-11	s	CAPACITOR,CERAMIC 0.1MF/25V F
C622	1-164-156-11	s	CAPACITOR,CERAMIC 0.1MF/25V F
C623	1-117-681-11	s	CAPACITOR,ELECT 100MF/16V
C624	1-164-156-11	s	CAPACITOR,CERAMIC 0.1MF/25V F
C625	1-115-467-11	s	CAPACITOR CERAMIC 0.22MF/10V B
C626	1-115-467-11	s	CAPACITOR CERAMIC 0.22MF/10V B
C627	1-115-467-11	s	CAPACITOR CERAMIC 0.22MF/10V B
C628	1-115-467-11	s	CAPACITOR,CERAMIC 0.22MF/10V B
C701	1-107-686-11	s	CAPACITOR,TANTALUM 4.7MF/16V
C702	1-107-686-11	s	CAPACITOR,TANTALUM 4.7MF/16V
C703	1-165-176-11	s	CAPACITOR,CERAMIC 47000PF/16V
C704	1-115-467-11	s	CAPACITOR,CERAMIC 0.22MF/10V B
C705	1-107-826-11	s	CAPACITOR,CHIP CERAMIC 0.1MF
C706	1-165-176-11	s	CAPACITOR,CERAMIC 47000PF/16V
C707	1-109-982-11	s	CAPACITOR,CHIP CERAMIC 1MF/10V
C708	1-124-779-00	s	CAPACITOR,ELECT 10MF/16V
C709	1-113-985-11	s	CAPACITOR,TANTALUM 10MF/20V
C710	1-109-982-11	s	CAPACITOR,CHIP CERAMIC 1MF/10V
C711	1-107-686-11	s	CAPACITOR,TANTALUM 4.7MF/16V
C712	1-126-204-11	s	CAPACITOR,ELECT 47MF/16V(CHIP
C713	1-107-826-11	s	CAPACITOR,CHIP CERAMIC 0.1MF
C714	1-107-686-11	s	CAPACITOR,TANTALUM 4.7MF/16V
C715	1-165-176-11	s	CAPACITOR,CERAMIC 47000PF/16V
C716	1-115-467-11	s	CAPACITOR,CERAMIC 0.22MF/10V B
C717	1-135-342-11	s	CAPACITOR,SOLID ELECT 56MF
C718	1-107-826-11	s	CAPACITOR,CHIP CERAMIC 0.1MF
C719	1-162-970-11	s	CAPACITOR,CERAMIC 0.01MF/25V B
C720	1-113-985-11	s	CAPACITOR,TANTALUM 10MF/20V
C721	1-165-176-11	s	CAPACITOR,CERAMIC 47000PF/16V
C722	1-124-779-00	s	CAPACITOR,ELECT 10MF/16V
C723	1-165-176-11	s	CAPACITOR,CERAMIC 47000PF/16V

(C BOARD) [VPL-CX2/CX3]

Ref. No. or Q'ty	Part No.	SP	Description
C724	1-165-176-11	s	CAPACITOR,CERAMIC 47000PF/16V
C726	1-135-347-11	s	CAPACITOR,SOLID ELECT 82MF
C727	1-107-826-11	s	CAPACITOR,CHIP CERAMIC 0.1MF
CN101	1-785-306-21	o	CONNECTOR, BOARD TO BOARD
CN102	1-770-620-21	s	PIN, CONNECTOR 3P
CN103	1-770-622-21	s	PIN, CONNECTOR 5P
CN104	1-785-306-21	o	CONNECTOR, BOARD TO BOARD
CN105	1-785-306-21	o	CONNECTOR, BOARD TO BOARD
CN106	1-770-619-11	o	PIN, CONNECTOR 2P
CN107	1-770-625-21	s	PIN, CONNECTOR 8P
CN108	1-580-055-21	o	PIN, CONNECTOR 2P
CN109	1-770-622-21	s	PIN, CONNECTOR 5P
CN110	1-778-965-21	s	PIN, CONNECTOR (PC BOARD) 12P
CN201	1-779-884-11	s	PLUG, CONNECTOR 4P
CN401	1-794-823-11	s	CONNECTOR (ZIF), FPC/FFC 32P
CN501	1-794-823-11	s	CONNECTOR (ZIF), FPC/FFC 32P
CN601	1-794-823-11	s	CONNECTOR (ZIF), FPC/FFC 32P
CN701	1-770-625-21	s	PIN, CONNECTOR 8P
D102	8-719-073-11	s	DIODE BZA456A
D103	8-719-073-11	s	DIODE BZA456A
D104	8-719-045-61	s	DIODE SEC1901C
D105	8-719-045-61	s	DIODE SEC1901C
D106	8-719-045-61	s	DIODE SEC1901C
D107	8-719-045-51	s	DIODE SEC2422C
D108	8-719-073-11	s	DIODE BZA456A
D201	8-719-914-43	s	DIODE DAN202K
D301	8-719-988-61	s	DIODE 1SS355TE-17
FB101	1-414-921-11	s	INDUCTOR, FERRITE BEAD
FB102	1-414-921-11	s	INDUCTOR, FERRITE BEAD
FB103	1-414-921-11	s	INDUCTOR, FERRITE BEAD
FB104	1-500-451-11	s	MICRO INDUCTOR (CHIP) 41P750S
FB105	1-414-921-11	s	INDUCTOR, FERRITE BEAD
FB106	1-414-921-11	s	INDUCTOR, FERRITE BEAD
FB107	1-414-921-11	s	INDUCTOR, FERRITE BEAD
FB108	1-414-921-11	s	INDUCTOR, FERRITE BEAD
FB109	1-414-921-11	s	INDUCTOR, FERRITE BEAD
FB110	1-414-921-11	s	INDUCTOR, FERRITE BEAD
FB111	1-414-921-11	s	INDUCTOR, FERRITE BEAD
FB112	1-414-921-11	s	INDUCTOR, FERRITE BEAD
FB113	1-414-921-11	s	INDUCTOR, FERRITE BEAD
FB114	1-414-921-11	s	INDUCTOR, FERRITE BEAD
FB119	1-500-451-11	s	MICRO INDUCTOR (CHIP) 41P750S
FB120	1-500-451-11	s	MICRO INDUCTOR (CHIP) 41P750S
FB121	1-500-451-11	s	MICRO INDUCTOR (CHIP) 41P750S
FB122	1-500-451-11	s	MICRO INDUCTOR (CHIP) 41P750S
FB123	1-500-451-11	s	MICRO INDUCTOR (CHIP) 41P750S
FB124	1-500-451-11	s	MICRO INDUCTOR (CHIP) 41P750S
FB201	1-414-921-11	s	INDUCTOR, FERRITE BEAD
FB202	1-414-921-11	s	INDUCTOR, FERRITE BEAD
FB206	1-414-921-11	s	INDUCTOR, FERRITE BEAD
FB208	1-414-921-11	s	INDUCTOR, FERRITE BEAD
FB301	1-414-921-11	s	INDUCTOR, FERRITE BEAD
FB302	1-414-921-11	s	INDUCTOR, FERRITE BEAD
FB303	1-414-921-11	s	INDUCTOR, FERRITE BEAD
FB401	1-414-921-11	s	INDUCTOR, FERRITE BEAD
FB402	1-414-921-11	s	INDUCTOR, FERRITE BEAD
FB403	1-414-921-11	s	INDUCTOR, FERRITE BEAD
FB405	1-414-921-11	s	INDUCTOR, FERRITE BEAD

(C BOARD) [VPL-CX2/CX3]

Ref. No. or Q'ty	Part No.	SP	Description
FB501	1-414-921-11	s	INDUCTOR, FERRITE BEAD
FB502	1-414-921-11	s	INDUCTOR, FERRITE BEAD
FB503	1-414-921-11	s	INDUCTOR, FERRITE BEAD
FB601	1-414-921-11	s	INDUCTOR, FERRITE BEAD
FB602	1-414-921-11	s	INDUCTOR, FERRITE BEAD
FB603	1-414-921-11	s	INDUCTOR, FERRITE BEAD
FB701	1-414-921-11	s	INDUCTOR, FERRITE BEAD
FB702	1-414-921-11	s	INDUCTOR, FERRITE BEAD
FB703	1-414-921-11	s	INDUCTOR, FERRITE BEAD
IC101	8-759-388-31	s	IC PQ20VZ1U
IC102	8-759-460-81	s	IC BA12FP-E2
IC103	8-759-485-79	s	IC TC7SET08FU (TE85L)
IC104	8-759-447-77	s	IC TC7WH74FU (TE12R)
IC105	8-759-485-79	s	IC TC7SET08FU (TE85L)
IC106	8-759-582-37	s	IC PQ2TZ15U
IC107	8-759-533-85	s	IC L88M05T-FA-TL
IC201	8-759-824-29	s	IC CXD9607GB
IC202	8-759-475-43	s	IC TC74LCX125FT(EL)
IC203	8-759-449-58	s	IC LM7131BCM5X
IC204	8-759-472-59	s	IC 74VHC541MTCX
IC205	8-759-472-59	s	IC 74VHC541MTCX
IC206	8-759-472-59	s	IC 74VHC541MTCX
IC207	8-759-544-01	s	IC S-80828ANNP-EDR-T2
IC208	————	s	IC M24C64-WMN6T(A)

Note If this IC has failed, replace the whole C board.

IC209	8-759-082-57	s	IC TC7W04FU
IC210	8-759-447-77	s	IC TC7WH74FU (TE12R)
IC301	8-759-645-13	s	IC ADV7123KST140
IC302	8-759-584-86	s	IC M52749FP-TP
IC303	8-759-571-03	s	IC LM4041DIM3-1.2(T&R)
IC304	8-759-542-46	s	IC M62392FP
IC401	8-752-093-18	s	IC CXA3512R-T6
IC402	8-752-093-18	s	IC CXA3512R-T6
IC403	8-759-252-41	s	IC TK11900MTL
IC501	8-752-093-18	s	IC CXA3512R-T6
IC502	8-752-093-18	s	IC CXA3512R-T6
IC601	8-752-093-18	s	IC CXA3512R-T6
IC602	8-752-093-18	s	IC CXA3512R-T6
IC701	8-759-702-02	s	IC NJM062M
IC702	8-759-702-02	s	IC NJM062M
IC703	8-752-091-06	s	IC CXA1846BN-T4
IC704	8-759-533-85	s	IC L88M05T-FA-TL
L201	1-469-525-91	s	INDUCTOR 10UH (NLFV25)
L301	1-469-525-91	s	INDUCTOR 10UH (NLFV25)
L302	1-469-525-91	s	INDUCTOR 10UH (NLFV25)
L303	1-469-525-91	s	INDUCTOR 10UH (NLFV25)
L304	1-469-525-91	s	INDUCTOR 10UH (NLFV25)
L305	1-469-525-91	s	INDUCTOR 10UH (NLFV25)
L401	1-410-369-11	s	INDUCTOR,CHIP 1UH (3225)
L402	1-410-369-11	s	INDUCTOR,CHIP 1UH (3225)
L501	1-410-369-11	s	INDUCTOR,CHIP 1UH (3225)
L502	1-410-369-11	s	INDUCTOR,CHIP 1UH (3225)
L601	1-410-369-11	s	INDUCTOR,CHIP 1UH (3225)
L602	1-410-369-11	s	INDUCTOR,CHIP 1UH (3225)
L701	1-412-028-11	s	INDUCTOR,CHIP 4.7UH (3225)
L702	1-412-028-11	s	INDUCTOR,CHIP 4.7UH (3225)
Q101	8-729-028-91	s	TRANSISTOR DTA144EUA-T106
Q201	8-729-230-49	s	TRANSISTOR 2SC2712-YG
Q202	8-729-026-49	s	TRANSISTOR 2SA1037AK-T146-R

(C BOARD) [VPL-CX2/CX3]

Ref. No. or Q'ty	Part No.	SP	Description
Q203	8-729-202-38	s	TRANSISTOR 2SC3326N-A
Q204	8-729-202-38	s	TRANSISTOR 2SC3326N-A
Q301	8-729-112-65	s	TRANSISTOR 2SA1462
Q302	8-729-112-65	s	TRANSISTOR 2SA1462
Q303	8-729-112-65	s	TRANSISTOR 2SA1462
Q304	8-729-112-65	s	TRANSISTOR 2SA1462
Q401	8-729-013-28	s	TRANSISTOR HN1B01FU-TE85R
Q402	8-729-013-28	s	TRANSISTOR HN1B01FU-TE85R
Q501	8-729-013-28	s	TRANSISTOR HN1B01FU-TE85R
Q502	8-729-013-28	s	TRANSISTOR HN1B01FU-TE85R
Q601	8-729-013-28	s	TRANSISTOR HN1B01FU-TE85R
Q602	8-729-013-28	s	TRANSISTOR HN1B01FU-TE85R
Q701	8-729-907-00	s	TRANSISTOR DTC114EU
Q702	8-729-907-00	s	TRANSISTOR DTC114EU
Q703	8-729-013-28	s	TRANSISTOR HN1B01FU-TE85R
R101	1-216-864-11	s	CONDUCTOR,CHIP (1608)
R102	1-216-833-11	s	RESISTOR,CHIP 10K 1/16W (1608)
R103	1-218-723-11	s	RESISTOR,CHIP 20K 1/16W(1608)
R104	1-218-714-11	s	RESISTOR,CHIP 8.2K 1/16W(1608)
R105	1-216-829-11	s	RESISTOR,CHIP 4.7K 1/16W(1608)
R106	1-218-685-11	s	RESISTOR,CHIP 510 1/16W
R107	1-218-692-11	s	RESISTOR,CHIP 1.0K 1/16W(1608)
R108	1-216-833-11	s	RESISTOR,CHIP 10K 1/16W (1608)
R110	1-216-809-11	s	RESISTOR,CHIP 100 1/16W 1608
R111	1-218-692-11	s	RESISTOR,CHIP 1.0K 1/16W(1608)
R112	1-216-809-11	s	RESISTOR,CHIP 100 1/16W 1608
R113	1-216-809-11	s	RESISTOR,CHIP 100 1/16W 1608
R118	1-216-809-11	s	RESISTOR,CHIP 100 1/16W 1608
R119	1-216-809-11	s	RESISTOR,CHIP 100 1/16W 1608
R120	1-216-805-11	s	RESISTOR,CHIP 47 1/16W 1608
R121	1-216-805-11	s	RESISTOR,CHIP 47 1/16W 1608
R123	1-216-805-11	s	RESISTOR,CHIP 47 1/16W 1608
R125	1-216-805-11	s	RESISTOR,CHIP 47 1/16W 1608
R127	1-216-815-11	s	RESISTOR,CHIP 330 1/16W 1608
R128	1-216-815-11	s	RESISTOR,CHIP 330 1/16W 1608
R129	1-216-815-11	s	RESISTOR,CHIP 330 1/16W 1608
R130	1-216-815-11	s	RESISTOR,CHIP 330 1/16W 1608
R131	1-216-821-11	s	RESISTOR,CHIP 1.0K 1/16W(1608)
R132	1-216-815-11	s	RESISTOR,CHIP 330 1/16W 1608
R134	1-216-864-11	s	CONDUCTOR,CHIP (1608)
R135	1-216-864-11	s	CONDUCTOR,CHIP (1608)
R201	1-216-839-11	s	RESISTOR,CHIP 33K 1/16W 1608
R202	1-216-833-11	s	RESISTOR,CHIP 10K 1/16W (1608)
R203	1-216-809-11	s	RESISTOR,CHIP 100 1/16W 1608
R204	1-216-809-11	s	RESISTOR,CHIP 100 1/16W 1608
R205	1-216-809-11	s	RESISTOR,CHIP 100 1/16W 1608
R206	1-216-809-11	s	RESISTOR,CHIP 100 1/16W 1608
R207	1-216-809-11	s	RESISTOR,CHIP 100 1/16W 1608
R208	1-216-809-11	s	RESISTOR,CHIP 100 1/16W 1608
R209	1-216-841-11	s	RESISTOR,CHIP 47K 1/16W 1608
R210	1-216-821-11	s	RESISTOR,CHIP 1.0K 1/16W(1608)
R211	1-216-833-11	s	RESISTOR,CHIP 10K 1/16W (1608)
R212	1-216-828-11	s	RESISTOR,CHIP 3.9K 1/16W 1608
R213	1-216-828-11	s	RESISTOR,CHIP 3.9K 1/16W 1608
R214	1-216-805-11	s	RESISTOR,CHIP 47 1/16W 1608
R215	1-216-805-11	s	RESISTOR,CHIP 47 1/16W 1608
R216	1-216-805-11	s	RESISTOR,CHIP 47 1/16W 1608
R217	1-216-805-11	s	RESISTOR,CHIP 47 1/16W 1608
R218	1-216-805-11	s	RESISTOR,CHIP 47 1/16W 1608

(C BOARD) [VPL-CX2/CX3]

Ref. No. or Q'ty	Part No.	SP	Description
R219	1-216-805-11	s	RESISTOR,CHIP 47 1/16W 1608
R220	1-216-829-11	s	RESISTOR,CHIP 4.7K 1/16W(1608)
R221	1-216-829-11	s	RESISTOR,CHIP 4.7K 1/16W(1608)
R222	1-216-825-11	s	RESISTOR,CHIP 2.2K 1/16W 1608
R223	1-216-825-11	s	RESISTOR,CHIP 2.2K 1/16W 1608
R224	1-216-805-11	s	RESISTOR,CHIP 47 1/16W 1608
R225	1-216-805-11	s	RESISTOR,CHIP 47 1/16W 1608
R226	1-216-841-11	s	RESISTOR,CHIP 47K 1/16W 1608
R227	1-216-841-11	s	RESISTOR,CHIP 47K 1/16W 1608
R228	1-216-817-11	s	RESISTOR,CHIP 470 1/16W 1608
R229	1-216-805-11	s	RESISTOR,CHIP 47 1/16W 1608
R230	1-216-814-11	s	RESISTOR,CHIP 270 1/16W 1608
R231	1-216-864-11	s	CONDUCTOR,CHIP (1608)
R233	1-216-864-11	s	CONDUCTOR,CHIP (1608)
R234	1-216-864-11	s	CONDUCTOR,CHIP (1608)
R235	1-216-833-11	s	RESISTOR,CHIP 10K 1/16W (1608)
R236	1-216-833-11	s	RESISTOR,CHIP 10K 1/16W (1608)
R238	1-216-864-11	s	CONDUCTOR,CHIP (1608)
R239	1-216-864-11	s	CONDUCTOR,CHIP (1608)
R241	1-216-864-11	s	CONDUCTOR,CHIP (1608)
R301	1-216-809-11	s	RESISTOR,CHIP 100 1/16W 1608
R302	1-216-809-11	s	RESISTOR,CHIP 100 1/16W 1608
R303	1-216-816-11	s	RESISTOR,CHIP 390 1/16W 1608
R304	1-216-809-11	s	RESISTOR,CHIP 100 1/16W 1608
R305	1-216-808-11	s	RESISTOR,CHIP 82 1/16W 1608
R306	1-216-841-11	s	RESISTOR,CHIP 47K 1/16W 1608
R307	1-216-819-11	s	RESISTOR,CHIP 680 1/16W 1608
R309	1-218-665-11	s	RESISTOR,CHIP 75 1/16W (1608)
R310	1-216-057-00	s	RESISTOR CHIP 2.2K 1/10W(2012)
R311	1-216-057-00	s	RESISTOR CHIP 2.2K 1/10W(2012)
R312	1-216-797-11	s	RESISTOR,CHIP 10 1/16W 1608
R313	1-216-833-11	s	RESISTOR,CHIP 10K 1/16W (1608)
R314	1-216-816-11	s	RESISTOR,CHIP 390 1/16W 1608
R315	1-216-853-11	s	RESISTOR,CHIP 470K 1/16W(1608)
R317	1-216-808-11	s	RESISTOR,CHIP 82 1/16W 1608
R318	1-216-797-11	s	RESISTOR,CHIP 10 1/16W 1608
R319	1-218-665-11	s	RESISTOR,CHIP 75 1/16W (1608)
R320	1-216-819-11	s	RESISTOR,CHIP 680 1/16W 1608
R322	1-216-057-00	s	RESISTOR CHIP 2.2K 1/10W(2012)
R323	1-216-057-00	s	RESISTOR CHIP 2.2K 1/10W(2012)
R324	1-216-797-11	s	RESISTOR,CHIP 10 1/16W 1608
R325	1-216-816-11	s	RESISTOR,CHIP 390 1/16W 1608
R326	1-218-665-11	s	RESISTOR,CHIP 75 1/16W (1608)
R327	1-216-819-11	s	RESISTOR,CHIP 680 1/16W 1608
R328	1-216-808-11	s	RESISTOR,CHIP 82 1/16W 1608
R329	1-216-057-00	s	RESISTOR CHIP 2.2K 1/10W(2012)
R330	1-216-057-00	s	RESISTOR CHIP 2.2K 1/10W(2012)
R331	1-218-688-11	s	RESISTOR,CHIP 680 1/16W(1608)
R332	1-216-809-11	s	RESISTOR,CHIP 100 1/16W 1608
R333	1-216-827-11	s	RESISTOR,CHIP 3.3K 1/16W 1608
R334	1-216-809-11	s	RESISTOR,CHIP 100 1/16W 1608
R335	1-216-809-11	s	RESISTOR,CHIP 100 1/16W 1608
R336	1-218-710-11	s	RESISTOR,CHIP 5.6K 1/16W(1608)
R337	1-218-716-11	s	RESISTOR,CHIP 10K 1/16W(1608)
R338	1-216-805-11	s	RESISTOR,CHIP 47 1/16W 1608
R339	1-216-805-11	s	RESISTOR,CHIP 47 1/16W 1608
R340	1-216-805-11	s	RESISTOR,CHIP 47 1/16W 1608
R341	1-216-805-11	s	RESISTOR,CHIP 47 1/16W 1608
R342	1-216-805-11	s	RESISTOR,CHIP 47 1/16W 1608

(C BOARD) [VPL-CX2/CX3]

Ref. No. or Q'ty	Part No.	SP	Description
R404	1-218-699-11	s	RESISTOR,CHIP 2.0K 1/16W(1608)
R405	1-216-805-11	s	RESISTOR,CHIP 47 1/16W 1608
R406	1-218-706-11	s	RESISTOR,CHIP 3.9K 1/16W(1608)
R407	1-216-864-11	s	CONDUCTOR,CHIP (1608)
R411	1-216-809-11	s	RESISTOR,CHIP 100 1/16W 1608
R412	1-216-809-11	s	RESISTOR,CHIP 100 1/16W 1608
R413	1-216-864-11	s	CONDUCTOR, CHIP (1608)
R414	1-216-864-11	s	CONDUCTOR, CHIP (1608)
R415	1-216-864-11	s	CONDUCTOR, CHIP (1608)
R416	1-216-864-11	s	CONDUCTOR, CHIP (1608)
R417	1-216-864-11	s	CONDUCTOR, CHIP (1608)
R418	1-216-864-11	s	CONDUCTOR, CHIP (1608)
R419	1-216-864-11	s	CONDUCTOR, CHIP (1608)
R420	1-216-864-11	s	CONDUCTOR, CHIP (1608)
R421	1-216-864-11	s	CONDUCTOR, CHIP (1608)
R422	1-216-864-11	s	CONDUCTOR, CHIP (1608)
R423	1-216-864-11	s	CONDUCTOR, CHIP (1608)
R424	1-216-864-11	s	CONDUCTOR, CHIP (1608)
R425	1-216-809-11	s	RESISTOR,CHIP 100 1/16W 1608
R426	1-216-825-11	s	RESISTOR,CHIP 2.2K 1/16W 1608
R427	1-216-825-11	s	RESISTOR,CHIP 2.2K 1/16W 1608
R428	1-218-720-11	s	RESISTOR,CHIP 15K 1/16W(1608)
R429	1-216-789-11	s	RESISTOR,CHIP 2.2 1/16W(1608)
R430	1-216-789-11	s	RESISTOR,CHIP 2.2 1/16W(1608)
R431	1-216-864-11	s	CONDUCTOR,CHIP (1608)
R432	1-218-744-11	s	RESISTOR,CHIP 150K 1/16W
R433	1-216-833-11	s	RESISTOR,CHIP 10K 1/16W (1608)
R434	1-216-833-11	s	RESISTOR,CHIP 10K 1/16W (1608)
R435	1-216-833-11	s	RESISTOR,CHIP 10K 1/16W (1608)
R436	1-218-699-11	s	RESISTOR,CHIP 2.0K 1/16W(1608)
R437	1-218-706-11	s	RESISTOR,CHIP 3.9K 1/16W(1608)
R438	1-216-864-11	s	CONDUCTOR,CHIP (1608)
R504	1-216-805-11	s	RESISTOR,CHIP 47 1/16W 1608
R505	1-218-699-11	s	RESISTOR,CHIP 2.0K 1/16W(1608)
R506	1-218-706-11	s	RESISTOR,CHIP 3.9K 1/16W(1608)
R507	1-216-864-11	s	CONDUCTOR,CHIP (1608)
R511	1-216-809-11	s	RESISTOR,CHIP 100 1/16W 1608
R512	1-216-809-11	s	RESISTOR,CHIP 100 1/16W 1608
R513	1-216-864-11	s	CONDUCTOR,CHIP (1608)
R514	1-216-864-11	s	CONDUCTOR,CHIP (1608)
R515	1-216-864-11	s	CONDUCTOR, CHIP (1608)
R516	1-216-864-11	s	CONDUCTOR, CHIP (1608)
R517	1-216-864-11	s	CONDUCTOR, CHIP (1608)
R518	1-216-864-11	s	CONDUCTOR, CHIP (1608)
R519	1-216-864-11	s	CONDUCTOR, CHIP (1608)
R520	1-216-864-11	s	CONDUCTOR, CHIP (1608)
R521	1-216-864-11	s	CONDUCTOR, CHIP (1608)
R522	1-216-864-11	s	CONDUCTOR, CHIP (1608)
R523	1-216-864-11	s	CONDUCTOR, CHIP (1608)
R524	1-216-864-11	s	CONDUCTOR, CHIP (1608)
R525	1-216-809-11	s	RESISTOR,CHIP 100 1/16W 1608
R526	1-216-825-11	s	RESISTOR,CHIP 2.2K 1/16W 1608
R527	1-216-825-11	s	RESISTOR,CHIP 2.2K 1/16W 1608
R528	1-216-789-11	s	RESISTOR,CHIP 2.2 1/16W(1608)
R529	1-216-789-11	s	RESISTOR,CHIP 2.2 1/16W(1608)
R530	1-216-864-11	s	CONDUCTOR,CHIP (1608)
R531	1-216-833-11	s	RESISTOR,CHIP 10K 1/16W (1608)
R532	1-216-833-11	s	RESISTOR,CHIP 10K 1/16W (1608)
R533	1-216-833-11	s	RESISTOR,CHIP 10K 1/16W (1608)

(C BOARD) [VPL-CX2/CX3]

Ref. No. or Q'ty	Part No.	SP	Description
R534	1-218-699-11	s	RESISTOR,CHIP 2.0K 1/16W(1608)
R535	1-218-706-11	s	RESISTOR,CHIP 3.9K 1/16W(1608)
R536	1-216-864-11	s	CONDUCTOR,CHIP (1608)
R604	1-218-699-11	s	RESISTOR,CHIP 2.0K 1/16W(1608)
R605	1-216-805-11	s	RESISTOR,CHIP 47 1/16W 1608
R606	1-218-706-11	s	RESISTOR,CHIP 3.9K 1/16W(1608)
R607	1-216-864-11	s	CONDUCTOR,CHIP (1608)
R611	1-216-809-11	s	RESISTOR,CHIP 100 1/16W 1608
R612	1-216-809-11	s	RESISTOR,CHIP 100 1/16W 1608
R613	1-216-864-11	s	CONDUCTOR,CHIP (1608)
R614	1-216-864-11	s	CONDUCTOR, CHIP (1608)
R615	1-216-864-11	s	CONDUCTOR, CHIP (1608)
R616	1-216-864-11	s	CONDUCTOR, CHIP (1608)
R617	1-216-864-11	s	CONDUCTOR, CHIP (1608)
R618	1-216-864-11	s	CONDUCTOR, CHIP (1608)
R619	1-216-864-11	s	CONDUCTOR, CHIP (1608)
R620	1-216-864-11	s	CONDUCTOR, CHIP (1608)
R621	1-216-864-11	s	CONDUCTOR, CHIP (1608)
R622	1-216-864-11	s	CONDUCTOR, CHIP (1608)
R623	1-216-864-11	s	CONDUCTOR, CHIP (1608)
R624	1-216-864-11	s	CONDUCTOR,CHIP (1608)
R625	1-216-809-11	s	RESISTOR,CHIP 100 1/16W 1608
R626	1-216-825-11	s	RESISTOR,CHIP 2.2K 1/16W 1608
R627	1-216-825-11	s	RESISTOR,CHIP 2.2K 1/16W 1608
R628	1-216-789-11	s	RESISTOR,CHIP 2.2 1/16W(1608)
R629	1-216-789-11	s	RESISTOR,CHIP 2.2 1/16W(1608)
R630	1-216-864-11	s	CONDUCTOR,CHIP (1608)
R631	1-216-833-11	s	RESISTOR,CHIP 10K 1/16W (1608)
R632	1-216-833-11	s	RESISTOR,CHIP 10K 1/16W (1608)
R633	1-216-833-11	s	RESISTOR,CHIP 10K 1/16W (1608)
R634	1-218-699-11	s	RESISTOR,CHIP 2.0K 1/16W(1608)
R635	1-218-706-11	s	RESISTOR,CHIP 3.9K 1/16W(1608)
R636	1-216-864-11	s	CONDUCTOR,CHIP (1608)
R701	1-216-833-11	s	RESISTOR,CHIP 10K 1/16W (1608)
R702	1-217-671-11	s	RESISTOR CHIP 1 1/10W(2125)
R703	1-216-841-11	s	RESISTOR,CHIP 47K 1/16W 1608
R704	1-216-824-11	s	RESISTOR,CHIP 1.8K 1/16W 1608
R705	1-216-841-11	s	RESISTOR,CHIP 47K 1/16W 1608
R706	1-216-814-11	s	RESISTOR,CHIP 270 1/16W 1608
R707	1-216-864-11	s	CONDUCTOR,CHIP (1608)
R709	1-216-864-11	s	CONDUCTOR,CHIP (1608)
R710	1-216-833-11	s	RESISTOR,CHIP 10K 1/16W (1608)
R711	1-216-841-11	s	RESISTOR,CHIP 47K 1/16W 1608
R712	1-217-671-11	s	RESISTOR CHIP 1 1/10W(2125)
R713	1-216-841-11	s	RESISTOR,CHIP 47K 1/16W 1608
R714	1-216-824-11	s	RESISTOR,CHIP 1.8K 1/16W 1608
R715	1-216-829-11	s	RESISTOR,CHIP 4.7K 1/16W(1608)
R716	1-216-864-11	s	CONDUCTOR,CHIP (1608)
R718	1-216-864-11	s	CONDUCTOR,CHIP (1608)
R719	1-216-809-11	s	RESISTOR,CHIP 100 1/16W 1608
R720	1-216-809-11	s	RESISTOR,CHIP 100 1/16W 1608
R721	1-216-809-11	s	RESISTOR,CHIP 100 1/16W 1608
R722	1-216-823-11	s	RESISTOR,CHIP 1.5K 1/16W
R723	1-216-827-11	s	RESISTOR,CHIP 3.3K 1/16W 1608
R724	1-216-845-11	s	RESISTOR,CHIP 100K 1/16W(1608)
R725	1-216-833-11	s	RESISTOR,CHIP 10K 1/16W (1608)
R726	1-216-829-11	s	RESISTOR,CHIP 4.7K 1/16W(1608)
R727	1-216-829-11	s	RESISTOR,CHIP 4.7K 1/16W(1608)
R728	1-216-829-11	s	RESISTOR,CHIP 4.7K 1/16W(1608)

(C BOARD) [VPL-CX2/CX3]

Ref. No. or Q'ty	Part No.	SP	Description
R729	1-216-814-11	s	RESISTOR,CHIP 270 1/16W 1608
RB101	1-233-576-11	s	RESISTOR,CHIP NETWORK 100
RB102	1-233-576-11	s	RESISTOR,CHIP NETWORK 100
RB103	1-233-576-11	s	RESISTOR,CHIP NETWORK 100
RB104	1-233-576-11	s	RESISTOR,CHIP NETWORK 100
RB201	1-233-576-11	s	RESISTOR,CHIP NETWORK 100
RB202	1-233-576-11	s	RESISTOR,CHIP NETWORK 100
RB203	1-233-576-11	s	RESISTOR,CHIP NETWORK 100
RB204	1-233-576-11	s	RESISTOR,CHIP NETWORK 100
RB205	1-233-576-11	s	RESISTOR,CHIP NETWORK 100
RB206	1-233-576-11	s	RESISTOR,CHIP NETWORK 100
RB207	1-233-575-11	s	RES, CHIP NETWORK 22
RB208	1-233-575-11	s	RES, CHIP NETWORK 22
RB209	1-233-388-11	s	FILTER, BAND PASS
RB210	1-233-388-11	s	FILTER, BAND PASS
RB211	1-233-575-11	s	RES, CHIP NETWORK 22
RB212	1-233-575-11	s	RES, CHIP NETWORK 22
RB301	1-233-576-11	s	RESISTOR,CHIP NETWORK 100
RB302	1-233-576-11	s	RESISTOR,CHIP NETWORK 100
RB303	1-233-576-11	s	RESISTOR,CHIP NETWORK 100
S201	1-571-674-11	s	SWITCH,SLIDE (2-2-2)
TH101	1-808-656-11	s	THERMISTOR
TP103	1-535-757-11	s	CHIP, CHECKER (CONNECTOR)
TP104	1-535-757-11	s	CHIP, CHECKER (CONNECTOR)
TP108	1-535-757-11	s	CHIP, CHECKER (CONNECTOR)
TP109	1-535-757-11	s	CHIP, CHECKER (CONNECTOR)
TP110	1-535-757-11	s	CHIP, CHECKER (CONNECTOR)
TP111	1-535-757-11	s	CHIP, CHECKER (CONNECTOR)
TP112	1-535-757-11	s	CHIP, CHECKER (CONNECTOR)
TP113	1-535-757-11	s	CHIP, CHECKER (CONNECTOR)
TP115	1-535-757-11	s	CHIP, CHECKER (CONNECTOR)
TP116	1-535-757-11	s	CHIP, CHECKER (CONNECTOR)
TP117	1-535-757-11	s	CHIP, CHECKER (CONNECTOR)
TP201	1-535-757-11	s	CHIP, CHECKER (CONNECTOR)
TP202	1-535-757-11	s	CHIP, CHECKER (CONNECTOR)
TP203	1-535-757-11	s	CHIP, CHECKER (CONNECTOR)
TP204	1-535-757-11	s	CHIP, CHECKER (CONNECTOR)
TP205	1-535-757-11	s	CHIP, CHECKER (CONNECTOR)
TP206	1-535-757-11	s	CHIP, CHECKER (CONNECTOR)
TP207	1-535-757-11	s	CHIP, CHECKER (CONNECTOR)
TP208	1-535-757-11	s	CHIP, CHECKER (CONNECTOR)
TP209	1-535-757-11	s	CHIP, CHECKER (CONNECTOR)
TP210	1-535-757-11	s	CHIP, CHECKER (CONNECTOR)
TP211	1-535-757-11	s	CHIP, CHECKER (CONNECTOR)
TP212	1-535-757-11	s	CHIP, CHECKER (CONNECTOR)
TP213	1-535-757-11	s	CHIP, CHECKER (CONNECTOR)
TP301	1-535-757-11	s	CHIP, CHECKER (CONNECTOR)
TP302	1-535-757-11	s	CHIP, CHECKER (CONNECTOR)
TP303	1-535-757-11	s	CHIP, CHECKER (CONNECTOR)
TP304	1-535-757-11	s	CHIP, CHECKER (CONNECTOR)
TP401	1-535-757-11	s	CHIP, CHECKER (CONNECTOR)
TP402	1-535-757-11	s	CHIP, CHECKER (CONNECTOR)
TP403	1-535-757-11	s	CHIP, CHECKER (CONNECTOR)
TP405	1-535-757-11	s	CHIP, CHECKER (CONNECTOR)
TP406	1-535-757-11	s	CHIP, CHECKER (CONNECTOR)
TP501	1-535-757-11	s	CHIP, CHECKER (CONNECTOR)
TP502	1-535-757-11	s	CHIP, CHECKER (CONNECTOR)

(C BOARD) [VPL-CX2/CX3]

Ref. No. or Q'ty	Part No.	SP	Description
TP504	1-535-757-11	s	CHIP, CHECKER (CONNECTOR)
TP505	1-535-757-11	s	CHIP, CHECKER (CONNECTOR)
TP601	1-535-757-11	s	CHIP, CHECKER (CONNECTOR)
TP602	1-535-757-11	s	CHIP, CHECKER (CONNECTOR)
TP604	1-535-757-11	s	CHIP, CHECKER (CONNECTOR)
TP605	1-535-757-11	s	CHIP, CHECKER (CONNECTOR)
TP701	1-535-757-11	s	CHIP, CHECKER (CONNECTOR)
TP702	1-535-757-11	s	CHIP, CHECKER (CONNECTOR)

F BOARD

Ref. No. or Q'ty	Part No.	SP	Description
1pc	A-1245-603-A	s	MOUNTED CIRCUIT BOARD, F
1pc	1-900-258-70	o	CONNECTOR ASSY A, VH 3P
1pc	1-900-258-78	o	CONNECTOR ASSY (4DIA), LUG
C1101 ⚠	1-113-895-11	s	CAPACITOR,CERAMIC 150PF B/250V
C1103 ⚠	1-125-933-51	s	CAP, METALIZED FILM 1.0MFMF
C1104 ⚠	1-117-916-51	s	CAP, METALIZED FILM 0.22MF
C1105 ⚠	1-117-916-51	s	CAP, METALIZED FILM 0.22MF
C1106 ⚠	1-113-895-11	s	CAPACITOR,CERAMIC 150PF B/250V
CN1101 ⚠	1-793-305-11	s	INLET, AC (AC-M11PB52)
F1101 ⚠	1-576-233-11	s	FUSE (H.B.C.) 6.3A/250V
FH1101	1-533-223-11	s	CLIP,FUSE
FH1102	1-533-223-11	s	CLIP,FUSE
L1101 ⚠	1-424-821-11	s	COIL, CHOKE 80UH
L1102 ⚠	1-424-822-11	s	COIL, LINE FILTER
R1101 ⚠	1-202-847-00	s	RESISTOR,SOLID 560K 1/2W
VD1101 ⚠	1-801-268-11	s	VARISTOR (TNR14V471K660)

GA BOARD

Ref. No. or Q'ty	Part No.	SP	Description
1pc	A-1316-567-A	s	MOUNTED CIRCUIT BOARD, GA
1pc	1-900-258-71	o	CONNECTOR ASSY B, VH 3P
1pc	1-900-258-72	o	CONNECTOR ASSY C, VH 3P
1pc	7-682-649-09	s	SCREW +PS 3X10(EP-FE/ZNBK/CM2)
C2101	1-117-227-11	s	CAPACITOR,PE FILM 1.0MF/450V
C2102	1-135-449-11	s	CAPCITOR ELECT 220MF/450V
C2103	1-137-477-11	s	CAPCITOR,FILM 0.47MF/400V
C2104	1-107-909-11	s	CAPACITOR,ELECT 47MF/50V
C2105	1-115-339-11	s	CAPACITOR,CERAMIC 0.1MF/50V
C2106	1-115-340-11	s	CAPACITOR CERAMIC 0.22MF/25V B
C2107	1-163-251-11	s	CAPACITOR CERAMIC 100PF/50V
CN2102	1-691-960-11	o	PIN,CONNECTOR (PC BOARD) 3P
CN2104	1-564-719-11	o	PIN,CONNECTOR (3P)
D2101	8-719-304-63	s	DIODE RM11C (RECTI)
D2102 ⚠	8-719-066-75	s	DIODE D6SB80
D2103	8-719-055-30	s	DIODE D1FS4A-TA
D2104	8-719-055-30	s	DIODE D1FS4A-TA
D2105	8-719-106-98	s	DIODE RD16M-B2
IC2101	8-749-015-27	s	IC MZ1540
L2101	1-424-820-11	s	COIL, CHOKE
L2102	1-416-945-11	s	COIL, CHOKE (SMD)
L2103	1-416-945-11	s	COIL, CHOKE (SMD)
L2104	1-416-945-11	s	COIL, CHOKE (SMD)
L2105	1-416-945-11	s	COIL, CHOKE (SMD)
L2106	1-416-945-11	s	COIL, CHOKE (SMD)
L2107	1-416-945-11	s	COIL, CHOKE (SMD)
L2108	1-416-945-11	s	COIL, CHOKE (SMD)
L2109	1-416-945-11	s	COIL, CHOKE (SMD)
Q2101	8-729-101-07	s	TRANSISTOR 2SB798
Q3601	8-729-101-07	s	TRANSISTOR 2SB798
R2101 ⚠	1-217-786-11	s	RESISTOR,CEMENT 22/5W (FUSE)
R2102	1-216-073-00	s	RESISTOR,CHIP 10K 1/10W(2012)
R2103	1-217-156-00	s	RESISTOR METAL 0.22/5W
R2104	1-220-269-11	s	RESISTOR,CHIP 330 1/2W (4532)
R2105	1-220-269-11	s	RESISTOR,CHIP 330 1/2W (4532)
R2106	1-216-063-91	s	RESISTOR,CHIP 3.9K 1/10W(2125)
R2107	1-216-065-91	s	RESISTOR,CHIP 4.7K 1/10W(2012)
R3606	1-249-389-11	s	RES,CARBON 4.7 1/4W
R3608	1-216-057-00	s	RESISTOR CHIP 2.2K 1/10W(2012)
R3609	1-216-073-00	s	RESISTOR,CHIP 10K 1/10W(2012)
RY2101 ⚠	1-755-275-11	s	RELAY, AC POWER (12V)

GB BOARD

Ref. No. or Q'ty	Part No.	SP	Description
1pc	A-1316-568-A	s	MOUNTED CIRCUIT BOARD, GB
C3107	1-163-021-91	s	CAPACITOR,CERAMIC 0.01MF/50V
C3108	1-136-479-11	s	CAPACITOR FILM 0.001MF/100V PP
C3109	1-163-021-91	s	CAPACITOR,CERAMIC 0.01MF/50V
C3110	1-124-779-00	s	CAPACITOR,ELECT 10MF/16V
C3111	1-109-994-11	s	CAPACITOR,CHIP CERAMIC 2.2MF B
C3112	1-126-967-11	s	CAPACITOR,ELECT 47MF/50V
C3113	1-130-495-00	s	CAPACITOR FILM 0.1MF/50V PETP
C3114	1-124-779-00	s	CAPACITOR,ELECT 10MF/16V
C3119	1-137-753-11	s	CAPACITOR METALIZED 4700PF
C3120	1-115-566-11	s	CAPACITOR,CERAMIC 4.7MF B/6.3V
C3121	1-107-911-11	s	CAPACITOR,ELECT 220MF/50V
C3122	1-115-339-11	s	CAPACITOR,CERAMIC 0.1MF/50V
C3123	1-111-066-11	s	CAPACITOR,ELECT 820MF/25V 105
C3125	1-128-946-11	s	CAPACITOR,ELECT 2200MF / 10V
C3126	1-115-339-11	s	CAPACITOR,CERAMIC 0.1MF/50V
C3128	1-109-994-11	s	CAPACITOR,CHIP CERAMIC 2.2MF B
C3130	1-113-900-11	s	CAPACITOR,CERAMIC 470PF/250V
C3131	1-115-339-11	s	CAPACITOR,CERAMIC 0.1MF/50V
C3201	1-128-527-11	s	CAPACITOR,ELECT 330MF/25V
C3202	1-104-652-11	s	CAPACITOR,ELECT 470MF/10V(105)
C3203	1-126-205-11	s	CAPACITOR,ELECT 47M/6.3
C3204	1-115-339-11	s	CAPACITOR,CERAMIC 0.1MF/50V
C3205	1-163-009-11	s	CAPACITOR,CERAMIC 1000PF/50V
C3206	1-163-021-91	s	CAPACITOR,CERAMIC 0.01MF/50V
C3207	1-115-339-11	s	CAPACITOR,CERAMIC 0.1MF/50V
C3208	1-163-021-91	s	CAPACITOR,CERAMIC 0.01MF/50V
C3209	1-128-391-11	s	CAPACITOR,ELECT 330MF/6.3V
C3211	1-127-738-11	s	CAPACITOR,CERAMIC 4.7MF/25V
C3212	1-127-738-11	s	CAPACITOR,CERAMIC 4.7MF/25V
C3314	1-117-370-11	s	CAPASITER CERAMIC 10MF (3216)
C3315	1-126-205-11	s	CAPACITOR,ELECT 47M/6.3
C3316	1-115-339-11	s	CAPACITOR,CERAMIC 0.1MF/50V
C3318	1-115-339-11	s	CAPACITOR,CERAMIC 0.1MF/50V
C3327	1-115-339-11	s	CAPACITOR,CERAMIC 0.1MF/50V
C3328	1-126-205-11	s	CAPACITOR,ELECT 47M/6.3
C3330	1-107-823-11	s	CAPACITOR,CERAMIC 0.47MF/16V
CN3201	1-564-705-11	o	PIN,CONNECTOR (3P)
CN3202	1-691-960-11	o	PIN,CONNECTOR (PC BOARD) 3P
CN3304	1-785-305-21	o	CONNECTOR, BOARD TO BOARD
D3103	8-719-107-13	s	DIODE RD18M-B1
D3104	8-719-055-30	s	DIODE D1FS4A-TA
D3107	8-719-979-64	s	DIODE UF4005PKG23
D3108	8-719-118-12	s	DIODE RD33M-B
D3109	8-719-073-52	s	DIODE D2FS6-TA
D3110	8-719-075-63	s	DIODE DF10SC6
D3112	8-719-075-63	s	DIODE DF10SC6
D3113	8-719-106-16	s	DIODE RD6.8M-B1
D3116	8-719-073-01	s	DIODE MA111-(K8).SO
D3118	8-719-073-01	s	DIODE MA111-(K8).SO
D3119	8-719-073-01	s	DIODE MA111-(K8).SO
D3121	8-719-073-01	s	DIODE MA111-(K8).SO
D3201	8-719-080-75	s	DIODE M1FL20U-4063
D3306	8-719-073-01	s	DIODE MA111-(K8).SO
IC3100	8-759-670-30	s	IC MCZ3001D
IC3102	8-759-388-23	s	IC TL431BCDR2

(GB BOARD)

Ref. No. or Q'ty	Part No.	SP	Description
IC3303	8-759-533-85	s	IC L88M05T-FA-TL
IC3304	8-759-533-85	s	IC L88M05T-FA-TL
IC3306	8-759-066-55	s	IC TA75W393FU
IC3307	8-759-066-55	s	IC TA75W393FU
IC3711	8-759-831-63	s	IC MD1320N-TA
L3201	1-416-606-11	s	COIL, CHOKE (SMD)
L3202	1-416-606-11	s	COIL, CHOKE (SMD)
L3203	1-416-758-11	s	COIL, CHOKE 22UH
PH3100	8-749-010-64	s	PHOTO COUPLER PC123F2
PH3101	8-749-010-64	s	PHOTO COUPLER PC123F2
PH3102	8-749-010-64	s	PHOTO COUPLER PC123F2
Q3102	8-729-049-51	s	TRANSISTOR 2SK2876-01MR-F119
Q3103	8-729-049-51	s	TRANSISTOR 2SK2876-01MR-F119
Q3104	8-729-013-28	s	TRANSISTOR HN1B01FU-TE85R
Q3106	8-729-230-49	s	TRANSISTOR 2SC2712-YG
Q3107	8-729-048-69	s	TRANSISTOR 2SJ530S-TL
Q3109	8-729-048-69	s	TRANSISTOR 2SJ530S-TL
Q3110	8-729-230-49	s	TRANSISTOR 2SC2712-YG
Q3201	1-801-806-11	s	TRANSISTOR DTC144EKA
R3107	1-249-389-11	s	RESISTOR,CARBON 4.7 1/4W
R3111	1-216-681-11	s	RESISTOR,CHIP 18K 1/10W (2012)
R3112	1-216-647-11	s	RESISTOR,CHIP 680 1/10W (2012)
R3113	1-216-677-11	s	RESISTOR,CHIP 12K 1/10W(2012)
R3114	1-216-627-11	s	RESISTOR,CHIP 100 1/10W (2012)
R3115	1-216-681-11	s	RESISTOR,CHIP 18K 1/10W (2012)
R3116	1-220-338-11	s	RESISTOR,CHIP 330K 1/2W (4532)
R3117	1-220-338-11	s	RESISTOR,CHIP 330K 1/2W (4532)
R3119	1-220-338-11	s	RESISTOR,CHIP 330K 1/2W (4532)
R3120	1-216-001-00	s	RESISTOR,CHIP 10 1/10W(2012)
R3121	1-216-001-00	s	RESISTOR,CHIP 10 1/10W(2012)
R3122	1-249-417-11	s	RESISTOR,CARBON 1K 1/4W(SMALL)
R3123	1-216-035-00	s	RESISTOR,CHIP 270 1/10W(2012)
R3124	1-216-073-00	s	RESISTOR,CHIP 10K 1/10W(2012)
R3125	1-216-073-00	s	RESISTOR,CHIP 10K 1/10W(2012)
R3126	1-202-933-61	s	RESISTOR,FUSE 0.1 1/2W
R3127	1-216-089-91	s	RESISTOR,CHIP 47K 1/10W(2012)
R3128	1-216-073-00	s	RESISTOR,CHIP 10K 1/10W(2012)
R3129	1-220-993-91	s	RESISTOR,CHIP 0.68 5025
R3130	1-220-993-91	s	RESISTOR,CHIP 0.68 5025
R3131	1-216-073-00	s	RESISTOR,CHIP 10K 1/10W(2012)
R3132	1-216-097-00	s	RESISTOR CHIP 100K 1/10W(2012)
R3133	1-216-073-00	s	RESISTOR,CHIP 10K 1/10W(2012)
R3134	1-216-049-11	s	RESISTOR,CHIP 1K 1/10W(2012)
R3135	1-216-047-91	s	RESISTOR,CHIP 820 1/10W(2125)
R3136	1-216-081-00	s	RESISTOR,CHIP 22K 1/10W(2012)
R3137	1-216-061-00	s	RESISTOR CHIP 3.3K 1/10W(2012)
R3138	1-216-041-00	s	RESISTOR,CHIP 470 1/10W(2012)
R3139	1-216-073-00	s	RESISTOR,CHIP 10K 1/10W(2012)
R3140	1-216-049-11	s	RESISTOR,CHIP 1K 1/10W(2012)
R3141	1-216-663-11	s	RESISTOR,CHIP 3.3K 1/10W(2012)
R3142	1-216-665-11	s	RESISTOR,CHIP 3.9K 1/10W(2012)
R3143	1-216-661-11	s	RESISTOR,CHIP 2.7K 1/10W(2012)
R3144	1-216-659-11	s	RESISTOR,CHIP 2.2K 1/10W(2012)
R3145	1-216-683-11	s	RESISTOR,CHIP 22K 1/10W (2012)
R3152	1-216-095-00	s	RESISTOR,CHIP 82K 1/10W(2012)
R3153	1-216-089-91	s	RESISTOR,CHIP 47K 1/10W(2012)
R3156	1-216-061-00	s	RESISTOR CHIP 3.3K 1/10W(2012)
R3157	1-216-089-91	s	RESISTOR,CHIP 47K 1/10W(2012)

(GB BOARD)

Ref. No. or Q'ty	Part No.	SP	Description
R3158	1-216-073-00	s	RESISTOR,CHIP 10K 1/10W(2012)
R3161	1-216-073-00	s	RESISTOR,CHIP 10K 1/10W(2012)
R3201	1-216-073-00	s	RESISTOR,CHIP 10K 1/10W(2012)
R3202	1-216-057-00	s	RESISTOR CHIP 2.2K 1/10W(2012)
R3203	1-216-073-00	s	RESISTOR,CHIP 10K 1/10W(2012)
R3204	1-216-073-00	s	RESISTOR,CHIP 10K 1/10W(2012)
R3205	1-216-073-00	s	RESISTOR,CHIP 10K 1/10W(2012)
R3206	1-216-097-00	s	RESISTOR CHIP 100K 1/10W(2012)
R3207	1-216-105-91	s	RESISTOR,CHIP 220K 1/10W(2125)
R3208	1-240-247-11	s	RESISTOR,SQUARE TYPE CHIP 0.1
R3321	1-216-073-00	s	RESISTOR,CHIP 10K 1/10W(2012)
R3322	1-216-073-00	s	RESISTOR,CHIP 10K 1/10W(2012)
R3323	1-216-073-00	s	RESISTOR,CHIP 10K 1/10W(2012)
R3324	1-216-097-00	s	RESISTOR CHIP 100K 1/10W(2012)
R3325	1-216-073-00	s	RESISTOR,CHIP 10K 1/10W(2012)
R3326	1-216-083-00	s	RESISTOR CHIP 27K 1/10W(2012)
R3327	1-216-049-11	s	RESISTOR,CHIP 1K 1/10W(2012)
R3330	1-216-097-00	s	RESISTOR CHIP 100K 1/10W(2012)
R3331	1-216-085-00	s	RESISTOR CHIP 33K 1/10W(2012)
T3100	1-437-380-11	s	TRANSFORMER,CONVERTER

GC BOARD

Ref. No. or Q'ty	Part No.	SP	Description
1pc	A-1316-569-A	s	MOUNTED CIRCUIT BOARD, GC
C4101	1-115-339-11	s	CAPACITOR,CERAMIC 0.1MF/50V
C4102	1-115-339-11	s	CAPACITOR,CERAMIC 0.1MF/50V
C4103	1-126-397-11	s	CAPACITOR,ELECT 33MF/25V(CHIP)
C4104	1-126-397-11	s	CAPACITOR,ELECT 33MF/25V(CHIP)
C4105	1-126-397-11	s	CAPACITOR,ELECT 33MF/25V(CHIP)
C4106	1-115-339-11	s	CAPACITOR,CERAMIC 0.1MF/50V
C4107	1-127-738-11	s	CAPACITOR,CERAMIC 4.7MF/25V
C4108	1-115-339-11	s	CAPACITOR,CERAMIC 0.1MF/50V
C4109	1-126-397-11	s	CAPACITOR,ELECT 33MF/25V(CHIP)
C4110	1-117-681-11	s	CAPACITOR,ELECT 100MF/16V
C4111	1-115-339-11	s	CAPACITOR,CERAMIC 0.1MF/50V
C4112	1-126-204-11	s	CAPACITOR,ELECT 47MF/16V(CHIP
C4113	1-115-339-11	s	CAPACITOR,CERAMIC 0.1MF/50V
C4114	1-127-738-11	s	CAPACITOR,CERAMIC 4.7MF/25V
CN4101	1-580-056-21	o	PIN,CONNECTOR 3P
CN4102	1-580-056-21	o	PIN,CONNECTOR 3P
CN4104	1-580-056-21	o	PIN,CONNECTOR 3P
CN4203	1-770-625-21	s	PIN,CONNECTOR 8P
D4101	8-719-055-30	s	DIODE D1FS4A-TA
D4102	8-719-914-43	s	DIODE DAN202K
D4103	8-719-055-30	s	DIODE D1FS4A-TA
D4104	8-719-914-43	s	DIODE DAN202K
D4105	8-719-055-30	s	DIODE D1FS4A-TA
IC4101	8-759-650-38	s	IC LT1374IS8
IC4102	8-759-388-31	s	IC PQ20VZ1U
L4101	1-416-606-11	s	COIL, CHOKE (SMD)
Q4101	8-729-230-49	s	TRANSISTOR 2SC2712-YG
Q4102	8-729-230-49	s	TRANSISTOR 2SC2712-YG
R4101	1-216-081-00	s	RESISTOR,CHIP 22K 1/10W(2012)
R4102	1-216-081-00	s	RESISTOR,CHIP 22K 1/10W(2012)
R4103	1-216-697-91	s	RESISTOR,CHIP 82K 1/10W
R4104	1-216-683-11	s	RESISTOR,CHIP 22K 1/10W (2012)
R4105	1-216-683-11	s	RESISTOR,CHIP 22K 1/10W (2012)
R4106	1-216-675-11	s	RESISTOR,CHIP 10K 1/10W(2012)
R4107	1-216-073-00	s	RESISTOR,CHIP 10K 1/10W(2012)
R4108	1-216-665-11	s	RESISTOR,CHIP 3.9K 1/10W(2012)
R4109	1-216-695-11	s	RESISTOR,CHIP 68K 1/10W(2012)
R4110	1-216-295-91	s	CONDUCTOR,CHIP (2012)
R4111	1-216-089-91	s	RESISTOR,CHIP 47K 1/10W(2012)
R4112	1-216-675-11	s	RESISTOR,CHIP 10K 1/10W(2012)
R4113	1-216-075-00	s	RESISTOR CHIP 12K 1/10W(2012)
R4114	1-216-073-00	s	RESISTOR,CHIP 10K 1/10W(2012)
R4115	1-216-671-11	s	RESISTOR,CHIP 6.8K 1/10W(2012)
R4116	1-216-665-11	s	RESISTOR,CHIP 3.9K 1/10W(2012)
R4117	1-216-081-00	s	RESISTOR,CHIP 22K 1/10W(2012)
R4118	1-216-025-00	s	RESISTOR,CHIP 100 1/10W(2012)
R4119	1-216-679-11	s	RESISTOR,CHIP 15K 1/10W (2012)
R4120	1-216-677-11	s	RESISTOR,CHIP 12K 1/10W(2012)
S4101	1-762-984-11	s	SWITCH,PUSH

H BOARD

Ref. No. or Q'ty	Part No.	SP	Description
1pc	A-1375-219-A	s	MOUNTED CIRCUIT BOARD, H
C001	1-107-826-11	s	CAPACITOR,CHIP CERAMIC 0.1MF
CN001	1-770-625-21	s	PIN, CONNECTOR 8P
CN002	1-770-619-11	o	PIN, CONNECTOR 2P
CN003	1-770-619-11	o	PIN, CONNECTOR 2P
D001	8-719-024-77	s	DIODE HN1D03FU-TE85L
R001	1-216-833-11	s	RESISTOR,CHIP 10K 1/16W (1608)
R002	1-216-833-11	s	RESISTOR,CHIP 10K 1/16W (1608)
R003	1-216-838-11	s	RESISTOR,CHIP 27K 1/16W (1608)
R004	1-216-834-11	s	RESISTOR,CHIP 12K 1/16W (1608)
R005	1-216-831-11	s	RESISTOR,CHIP 6.8K 1/16W(1608)
R006	1-216-828-11	s	RESISTOR, CHIP 3.9K 1/16W 1608
R007	1-216-826-11	s	RESISTOR,CHIP 2.7K 1/16W(1608)
R008	1-216-825-11	s	RESISTOR,CHIP 2.2K 1/16W 1608
R009	1-216-823-11	s	RESISTOR, CHIP 1.5K 1/16W
R010	1-216-824-11	s	RESISTOR, CHIP 1.8K 1/16W 1608
R011	1-216-826-11	s	RESISTOR,CHIP 2.7K 1/16W(1608)
R012	1-216-825-11	s	RESISTOR,CHIP 2.2K 1/16W 1608
R013	1-216-823-11	s	RESISTOR, CHIP 1.5K 1/16W
R014	1-216-824-11	s	RESISTOR, CHIP 1.8K 1/16W 1608
S001	1-771-105-11	s	SWITCH, TACTILE
S002	1-771-105-11	s	SWITCH, TACTILE
S003	1-771-105-11	s	SWITCH, TACTILE
S004	1-771-105-11	s	SWITCH, TACTILE
S005	1-771-105-11	s	SWITCH, TACTILE
S006	1-771-105-11	s	SWITCH, TACTILE
S007	1-771-105-11	s	SWITCH, TACTILE
S008	1-771-105-11	s	SWITCH, TACTILE
S009	1-771-105-11	s	SWITCH, TACTILE
S010	1-771-105-11	s	SWITCH, TACTILE

MS BOARD [VPL-CX3 ONLY]

Ref. No. or Q'ty	Part No.	SP	Description
1pc	A-1306-609-A	s	MOUNTED CIRCUIT BOARD, MS
C101	1-107-826-11	s	CAPACITOR,CHIP CERAMIC 0.1MF
C102	1-107-826-11	s	CAPACITOR,CHIP CERAMIC 0.1MF
C103	1-107-826-11	s	CAPACITOR,CHIP CERAMIC 0.1MF
C104	1-107-826-11	s	CAPACITOR,CHIP CERAMIC 0.1MF
C105	1-107-826-11	s	CAPACITOR,CHIP CERAMIC 0.1MF
C106	1-110-501-11	s	CAPACITOR CERAMIC 0.33MF/16V
C107	1-128-694-11	s	CAPACITOR,CHIP TANTALUM ELECT 22MF
C108	1-107-826-11	s	CAPACITOR,CHIP CERAMIC 0.1MF
C109	1-107-826-11	s	CAPACITOR,CHIP CERAMIC 0.1MF
C110	1-107-826-11	s	CAPACITOR,CHIP CERAMIC 0.1MF
C111	1-128-694-11	s	CAPACITOR,CHIP TANTALUM ELECT 22MF
C112	1-107-826-11	s	CAPACITOR,CHIP CERAMIC 0.1MF
C113	1-162-916-11	s	CAPACITOR,CERAMIC 12PF/50V CH
C114	1-162-916-11	s	CAPACITOR,CERAMIC 12PF/50V CH
C115	1-115-416-11	s	CAPACITOR,CERAMIC 1000PF/25V
C116	1-115-416-11	s	CAPACITOR,CERAMIC 1000PF/25V
C117	1-162-927-11	s	CAPACITOR,CERAMIC 100PF/50V CH
C118	1-162-927-11	s	CAPACITOR,CERAMIC 100PF/50V CH
C119	1-162-915-11	s	CAPACITOR,CERAMIC 10PF/50V CH
C120	1-162-915-11	s	CAPACITOR,CERAMIC 10PF/50V CH
C121	1-125-838-11	s	CAPACITOR,CERAMIC 2.2MF/6.3V
C123	1-107-826-11	s	CAPACITOR,CHIP CERAMIC 0.1MF
C124	1-107-826-11	s	CAPACITOR,CHIP CERAMIC 0.1MF
C125	1-127-715-11	s	CAPACITOR,CERAMIC 0.22MF B1608
C126	1-107-826-11	s	CAPACITOR,CHIP CERAMIC 0.1MF
C127	1-107-826-11	s	CAPACITOR,CHIP CERAMIC 0.1MF
C128	1-107-826-11	s	CAPACITOR,CHIP CERAMIC 0.1MF
C129	1-107-826-11	s	CAPACITOR,CHIP CERAMIC 0.1MF
C130	1-107-826-11	s	CAPACITOR,CHIP CERAMIC 0.1MF
C131	1-107-826-11	s	CAPACITOR,CHIP CERAMIC 0.1MF
C132	1-107-826-11	s	CAPACITOR,CHIP CERAMIC 0.1MF
C133	1-107-826-11	s	CAPACITOR,CHIP CERAMIC 0.1MF
C134	1-107-826-11	s	CAPACITOR,CHIP CERAMIC 0.1MF
C135	1-107-826-11	s	CAPACITOR,CHIP CERAMIC 0.1MF
C136	1-107-826-11	s	CAPACITOR,CHIP CERAMIC 0.1MF
C137	1-107-826-11	s	CAPACITOR,CHIP CERAMIC 0.1MF
C138	1-107-826-11	s	CAPACITOR,CHIP CERAMIC 0.1MF
C139	1-107-826-11	s	CAPACITOR,CHIP CERAMIC 0.1MF
C140	1-128-694-11	s	CAPACITOR,CHIP TANTALUM ELECT 22MF
C141	1-107-826-11	s	CAPACITOR,CHIP CERAMIC 0.1MF
C142	1-107-826-11	s	CAPACITOR,CHIP CERAMIC 0.1MF
C143	1-107-826-11	s	CAPACITOR,CHIP CERAMIC 0.1MF
C144	1-107-826-11	s	CAPACITOR,CHIP CERAMIC 0.1MF
C145	1-107-826-11	s	CAPACITOR,CHIP CERAMIC 0.1MF
C146	1-107-826-11	s	CAPACITOR,CHIP CERAMIC 0.1MF
C147	1-107-826-11	s	CAPACITOR,CHIP CERAMIC 0.1MF
C149	1-107-826-11	s	CAPACITOR,CHIP CERAMIC 0.1MF
C150	1-107-826-11	s	CAPACITOR,CHIP CERAMIC 0.1MF
C151	1-107-826-11	s	CAPACITOR,CHIP CERAMIC 0.1MF
C152	1-107-826-11	s	CAPACITOR,CHIP CERAMIC 0.1MF
C153	1-107-826-11	s	CAPACITOR,CHIP CERAMIC 0.1MF
C158	1-162-960-11	s	CAPACITOR,CERAMIC 220PF/50V(B)
C159	1-162-960-11	s	CAPACITOR,CERAMIC 220PF/50V(B)
C160	1-107-826-11	s	CAPACITOR,CHIP CERAMIC 0.1MF
C161	1-107-826-11	s	CAPACITOR,CHIP CERAMIC 0.1MF
C163	1-128-694-11	s	CAPACITOR,CHIP TANTALUM ELECT 22MF
C164	1-162-927-11	s	CAPACITOR,CERAMIC 100PF/50V CH

(MS BOARD)

Ref. No. or Q'ty	Part No.	SP	Description
CN101	1-793-641-11	s	CONNECTOR, MEMORY STICK
CN102	1-793-141-11	o	PIN, CONNECTOR (PC BOARD)
CN103	1-770-625-21	s	PIN, CONNECTOR 8P
CN104	1-815-353-21	o	CONNECTOR, BORD TO BOARD 50P
D101	8-719-075-56	s	DIODE FA1113F-Y641-TR
D105	8-719-081-42	s	DIODE UMZ6.8N-T106
D106	8-719-081-42	s	DIODE UMZ6.8N-T106
D107	8-719-081-42	s	DIODE UMZ6.8N-T106
D108	8-719-422-12	s	DIODE MA8039
FB101	1-414-921-11	s	INDUCTOR, FERRITE BEAD
FB102	1-414-921-11	s	INDUCTOR, FERRITE BEAD
FB103	1-414-921-11	s	INDUCTOR, FERRITE BEAD
FB104	1-414-921-11	s	INDUCTOR, FERRITE BEAD
FB105	1-414-921-11	s	INDUCTOR, FERRITE BEAD
FB106	1-500-451-11	s	MICRO INDUCTOR (CHIP) 41P750S
FB107	1-414-921-11	s	INDUCTOR, FERRITE BEAD
FB108	1-414-921-11	s	INDUCTOR, FERRITE BEAD
FB109	1-414-921-11	s	INDUCTOR, FERRITE BEAD
FB110	1-414-921-11	s	INDUCTOR, FERRITE BEAD
FB111	1-414-921-11	s	INDUCTOR, FERRITE BEAD
IC101	8-759-831-96	s	IC MD2305E
IC102	6-800-267-01	s	IC SST39VF800A70-1714A-T
IC103	8-759-831-93	s	IC HM62W16256BLTT5SLZ
IC104	8-759-460-72	s	IC BA033FP
IC105	8-759-584-32	s	IC MB86189PFV-G-BND-ER
IC106	8-759-661-55	s	IC ST24FC21M6TR
IC107	8-759-331-27	s	IC MM1096AFF
IC108	8-759-831-91	s	IC MT48LC8M16A2TG-75TR
IC110	6-800-258-01	o	IC ISPLSI2032VE-110LT44/1714A
IC115	8-759-698-31	s	IC TC7WH74FK(TE85R)
IC116	6-700-379-01	s	IC TC74HC148AF(EL)
IC118	8-759-510-73	s	IC BA10393F-E2
Q101	8-729-029-14	s	TRANSISTOR DTC144EUA-T106
Q102	8-729-140-63	s	TRANSISTOR 2SA1611-M5M6
Q103	8-729-013-28	s	TRANSISTOR HN1B01FU-TE85R
Q104	8-729-140-63	s	TRANSISTOR 2SA1611-M5M6
Q105	8-729-427-72	s	TRANSISTOR XP4501-TXE
R101	1-216-864-11	s	CONDUCTOR, CHIP (1608)
R102	1-216-864-11	s	CONDUCTOR, CHIP (1608)
R103	1-216-864-11	s	CONDUCTOR, CHIP (1608)
R104	1-216-864-11	s	CONDUCTOR, CHIP (1608)
R105	1-216-864-11	s	CONDUCTOR, CHIP (1608)
R106	1-216-864-11	s	CONDUCTOR, CHIP (1608)
R107	1-216-864-11	s	CONDUCTOR, CHIP (1608)
R108	1-216-833-11	s	RESISTOR,CHIP 10K 1/16W (1608)
R109	1-216-857-11	s	RESISTOR,CHIP 1M 1/16W(1608)
R110	1-216-833-11	s	RESISTOR,CHIP 10K 1/16W (1608)
R111	1-216-833-11	s	RESISTOR,CHIP 10K 1/16W (1608)
R112	1-216-833-11	s	RESISTOR,CHIP 10K 1/16W (1608)
R113	1-216-833-11	s	RESISTOR,CHIP 10K 1/16W (1608)
R114	1-216-864-11	s	CONDUCTOR,CHIP (1608)
R115	1-216-845-11	s	RESISTOR,CHIP 100K 1/16W(1608)
R116	1-216-845-11	s	RESISTOR,CHIP 100K 1/16W(1608)
R117	1-216-864-11	s	CONDUCTOR,CHIP (1608)
R118	1-216-845-11	s	RESISTOR,CHIP 100K 1/16W(1608)
R119	1-216-845-11	s	RESISTOR,CHIP 100K 1/16W(1608)
R120	1-216-845-11	s	RESISTOR,CHIP 100K 1/16W(1608)

(MS BOARD)

Ref. No. or Q'ty	Part No.	SP	Description
R121	1-216-864-11	s	CONDUCTOR,CHIP (1608)
R122	1-216-833-11	s	RESISTOR,CHIP 10K 1/16W (1608)
R123	1-216-833-11	s	RESISTOR,CHIP 10K 1/16W (1608)
R126	1-216-864-11	s	CONDUCTOR,CHIP (1608)
R127	1-216-864-11	s	CONDUCTOR,CHIP (1608)
R128	1-216-809-11	s	RESISTOR,CHIP 100 1/16W 1608
R129	1-216-864-11	s	CONDUCTOR,CHIP (1608)
R130	1-216-845-11	s	RESISTOR,CHIP 100K 1/16W(1608)
R131	1-216-864-11	s	CONDUCTOR,CHIP (1608)
R134	1-216-821-11	s	RESISTOR,CHIP 1.0K 1/16W(1608)
R135	1-216-825-11	s	RESISTOR,CHIP 2.2K 1/16W 1608
R136	1-216-809-11	s	RESISTOR,CHIP 100 1/16W 1608
R138	1-216-801-11	s	RESISTOR,CHIP 22 1/16W (1608)
R139	1-216-801-11	s	RESISTOR,CHIP 22 1/16W (1608)
R140	1-216-809-11	s	RESISTOR,CHIP 100 1/16W 1608
R141	1-216-809-11	s	RESISTOR,CHIP 100 1/16W 1608
R142	1-216-823-11	s	RESISTOR,CHIP 1.5K 1/16W
R143	1-216-833-11	s	RESISTOR,CHIP 10K 1/16W (1608)
R144	1-216-809-11	s	RESISTOR,CHIP 100 1/16W 1608
R145	1-216-809-11	s	RESISTOR,CHIP 100 1/16W 1608
R146	1-216-829-11	s	RESISTOR,CHIP 4.7K 1/16W(1608)
R147	1-216-833-11	s	RESISTOR,CHIP 10K 1/16W (1608)
R148	1-216-839-11	s	RESISTOR,CHIP 33K 1/16W 1608
R149	1-216-839-11	s	RESISTOR,CHIP 33K 1/16W 1608
R150	1-216-833-11	s	RESISTOR,CHIP 10K 1/16W (1608)
R151	1-216-864-11	s	CONDUCTOR,CHIP (1608)
R152	1-216-833-11	s	RESISTOR,CHIP 10K 1/16W (1608)
R153	1-216-829-11	s	RESISTOR,CHIP 4.7K 1/16W(1608)
R154	1-216-864-11	s	CONDUCTOR,CHIP (1608)
R155	1-216-864-11	s	CONDUCTOR,CHIP (1608)
R156	1-216-845-11	s	RESISTOR,CHIP 100K 1/16W(1608)
R157	1-216-809-11	s	RESISTOR,CHIP 100 1/16W 1608
R158	1-216-864-11	s	CONDUCTOR,CHIP (1608)
R159	1-216-833-11	s	RESISTOR,CHIP 10K 1/16W (1608)
R160	1-216-833-11	s	RESISTOR,CHIP 10K 1/16W (1608)
R161	1-216-801-11	s	RESISTOR,CHIP 22 1/16W (1608)
R162	1-216-809-11	s	RESISTOR,CHIP 100 1/16W 1608
R163	1-216-809-11	s	RESISTOR,CHIP 100 1/16W 1608
R164	1-216-833-11	s	RESISTOR,CHIP 10K 1/16W (1608)
R165	1-216-809-11	s	RESISTOR,CHIP 100 1/16W 1608
R166	1-216-864-11	s	CONDUCTOR,CHIP (1608)
R167	1-216-809-11	s	RESISTOR,CHIP 100 1/16W 1608
R169	1-216-809-11	s	RESISTOR,CHIP 100 1/16W 1608
R171	1-216-809-11	s	RESISTOR,CHIP 100 1/16W 1608
R173	1-216-801-11	s	RESISTOR,CHIP 22 1/16W (1608)
R174	1-216-864-11	s	CONDUCTOR,CHIP (1608)
R176	1-216-864-11	s	CONDUCTOR,CHIP (1608)
R177	1-216-864-11	s	CONDUCTOR,CHIP (1608)
R178	1-216-828-11	s	RESISTOR,CHIP 3.9K 1/16W 1608
R179	1-216-831-11	s	RESISTOR,CHIP 6.8K 1/16W(1608)
R180	1-216-829-11	s	RESISTOR,CHIP 4.7K 1/16W(1608)
R181	1-216-833-11	s	RESISTOR,CHIP 10K 1/16W (1608)
R182	1-216-828-11	s	RESISTOR,CHIP 3.9K 1/16W 1608
R183	1-216-831-11	s	RESISTOR,CHIP 6.8K 1/16W(1608)
R184	1-216-809-11	s	RESISTOR,CHIP 100 1/16W 1608
R186	1-216-818-11	s	RESISTOR,CHIP 560 1/16W 1608
R189	1-216-864-11	s	CONDUCTOR,CHIP (1608)
R190	1-216-864-11	s	CONDUCTOR,CHIP (1608)
R192	1-216-833-11	s	RESISTOR,CHIP 10K 1/16W (1608)

(MS BOARD)

Ref. No. or Q'ty	Part No.	SP	Description
R193	1-216-833-11	s	RESISTOR,CHIP 10K 1/16W (1608)
R195	1-216-801-11	s	RESISTOR,CHIP 22 1/16W (1608)
R196	1-216-809-11	s	RESISTOR,CHIP 100 1/16W 1608
R197	1-216-809-11	s	RESISTOR,CHIP 100 1/16W 1608
R199	1-216-833-11	s	RESISTOR,CHIP 10K 1/16W (1608)
R200	1-216-833-11	s	RESISTOR,CHIP 10K 1/16W (1608)
R202	1-216-864-11	s	CONDUCTOR,CHIP (1608)
R203	1-216-831-11	s	RESISTOR,CHIP 6.8K 1/16W(1608)
R204	1-216-828-11	s	RESISTOR,CHIP 3.9K 1/16W 1608
R205	1-216-833-11	s	RESISTOR,CHIP 10K 1/16W (1608)
R206	1-216-809-11	s	RESISTOR,CHIP 100 1/16W 1608
R207	1-216-809-11	s	RESISTOR,CHIP 100 1/16W 1608
R208	1-216-801-11	s	RESISTOR,CHIP 22 1/16W (1608)
R209	1-216-809-11	s	RESISTOR,CHIP 100 1/16W 1608
R210	1-216-809-11	s	RESISTOR,CHIP 100 1/16W 1608
R212	1-216-810-11	s	RESISTOR,CHIP 120 1/16W 1608
R214	1-216-833-11	s	RESISTOR,CHIP 10K 1/16W (1608)
R215	1-216-809-11	s	RESISTOR,CHIP 100 1/16W 1608
R216	1-216-809-11	s	RESISTOR,CHIP 100 1/16W 1608
R217	1-216-833-11	s	RESISTOR,CHIP 10K 1/16W (1608)
R218	1-216-833-11	s	RESISTOR,CHIP 10K 1/16W (1608)
R219	1-216-841-11	s	RESISTOR,CHIP 47K 1/16W 1608
R220	1-216-841-11	s	RESISTOR,CHIP 47K 1/16W 1608
R221	1-216-809-11	s	RESISTOR,CHIP 100 1/16W 1608
R222	1-216-809-11	s	RESISTOR,CHIP 100 1/16W 1608
R223	1-216-841-11	s	RESISTOR,CHIP 47K 1/16W 1608
R226	1-218-704-11	s	RESISTOR,CHIP 3.3K 1/16W(1608)
R227	1-218-700-11	s	RESISTOR,CHIP 2.2K 1/16W(1608)
R228	1-218-696-11	s	RESISTOR,CHIP 1.5K 1/16W(1608)
R229	1-218-703-11	s	RESISTOR,CHIP 3.0K 1/16(1608)
R230	1-216-833-11	s	RESISTOR,CHIP 10K 1/16W (1608)
R231	1-216-833-11	s	RESISTOR,CHIP 10K 1/16W (1608)
R232	1-216-833-11	s	RESISTOR,CHIP 10K 1/16W (1608)
R233	1-216-833-11	s	RESISTOR,CHIP 10K 1/16W (1608)
R234	1-218-720-11	s	RESISTOR,CHIP 15K 1/16W(1608)
R235	1-218-712-11	s	RESISTOR,METAL 6.8K 1/16W
R236	1-218-710-11	s	RESISTOR,CHIP 5.6K 1/16W(1608)
R237	1-218-704-11	s	RESISTOR,CHIP 3.3K 1/16W(1608)
R238	1-218-704-11	s	RESISTOR,CHIP 3.3K 1/16W(1608)
R239	1-218-710-11	s	RESISTOR,CHIP 5.6K 1/16W(1608)
R240	1-218-710-11	s	RESISTOR,CHIP 5.6K 1/16W(1608)
R241	1-218-712-11	s	RESISTOR,METAL 6.8K 1/16W
R242	1-216-833-11	s	RESISTOR,CHIP 10K 1/16W (1608)
R243	1-216-833-11	s	RESISTOR,CHIP 10K 1/16W (1608)
R245	1-216-833-11	s	RESISTOR,CHIP 10K 1/16W (1608)
R246	1-216-809-11	s	RESISTOR,CHIP 100 1/16W 1608
RB101	1-233-810-21	s	RES, NETWORK 100K (3216)
RB102	1-233-810-21	s	RES, NETWORK 100K (3216)
RB103	1-233-810-21	s	RES, NETWORK 100K (3216)
RB104	1-233-810-21	s	RES, NETWORK 100K (3216)
RB105	1-233-576-11	s	RESISTOR,CHIP NETWORK 100
RB106	1-236-908-11	s	RESISTOR,NETWORK 10K (3216)
RB107	1-233-574-11	s	RESISTOR,CHIP NETWORK 10
RB108	1-233-574-11	s	RESISTOR,CHIP NETWORK 10
RB109	1-233-574-11	s	RESISTOR,CHIP NETWORK 10
RB110	1-233-574-11	s	RESISTOR,CHIP NETWORK 10
RB111	1-233-576-11	s	RESISTOR,CHIP NETWORK 100

(MS BOARD)

Ref. No. or Q'ty	Part No.	SP	Description
TP101	1-535-757-11	s	CHIP, CHECKER (CONNECTOR)
X101	1-795-098-11	s	VIBRATOR, CRYSTAL
X103	1-781-968-21	s	VIBRATOR, CRYSTAL (6000 MHz)
X104	1-781-976-11	s	OSCILLATOR, CRYSTAL

NF BOARD

Ref. No. or Q'ty	Part No.	SP	Description
1pc	A-1391-121-A	s	MOUNTED CIRCUIT BOARD, NF
C071	1-113-985-11	s	CAPACITOR,TANTALUM 10MF/20V
CN071	1-770-620-21	s	PIN, CONNECTOR 3P
IC071	8-749-012-17	s	IC RS-140-T
R071	1-216-805-11	s	RESISTOR,CHIP 47 1/16W 1608
R072	1-216-809-11	s	RESISTOR,CHIP 100 1/16W 1608

QA BOARD [VPL-CX3 ONLY]

Ref. No. or Q'ty	Part No.	SP	Description
1pc	A-1275-208-A	s	MOUNTED CIRCUIT BOARD, QA
C401	1-162-921-11	s	CAPACITOR,CERAMIC 33PF/50V CH
C402	1-162-921-11	s	CAPACITOR,CERAMIC 33PF/50V CH
C403	1-124-778-00	s	CAPACITOR,ELECT 22MF/6.3V
C404	1-107-826-11	s	CAPACITOR,CHIP CERAMIC 0.1MF
C405	1-162-970-11	s	CAPACITOR CERAMIC 0.01MF/25V B
C406	1-107-826-11	s	CAPACITOR,CHIP CERAMIC 0.1MF
C407	1-107-826-11	s	CAPACITOR,CHIP CERAMIC 0.1MF
C408	1-107-826-11	s	CAPACITOR,CHIP CERAMIC 0.1MF
C409	1-107-826-11	s	CAPACITOR,CHIP CERAMIC 0.1MF
C410	1-107-826-11	s	CAPACITOR,CHIP CERAMIC 0.1MF
C411	1-107-826-11	s	CAPACITOR,CHIP CERAMIC 0.1MF
C412	1-107-826-11	s	CAPACITOR,CHIP CERAMIC 0.1MF
C413	1-107-826-11	s	CAPACITOR,CHIP CERAMIC 0.1MF
C414	1-107-826-11	s	CAPACITOR,CHIP CERAMIC 0.1MF
C415	1-162-915-11	s	CAPACITOR,CERAMIC 10PF/50V CH
C416	1-162-915-11	s	CAPACITOR,CERAMIC 10PF/50V CH
C417	1-117-681-11	s	CAPACITOR,ELECT 100MF/16V
C418	1-126-206-11	s	CAPACITOR,ELECT 100MF/6.3V
C419	1-107-826-11	s	CAPACITOR,CHIP CERAMIC 0.1MF
C420	1-125-891-11	s	CAPACITOR CERAMIC 0.47MF/10V
C421	1-124-778-00	s	CAPACITOR,ELECT 22MF/6.3V
C422	1-162-921-11	s	CAPACITOR,CERAMIC 33PF/50V CH
C423	1-162-921-11	s	CAPACITOR,CERAMIC 33PF/50V CH
C424	1-107-826-11	s	CAPACITOR,CHIP CERAMIC 0.1MF
C425	1-162-970-11	s	CAPACITOR,CERAMIC 0.01MF/25V B
C426	1-107-826-11	s	CAPACITOR,CHIP CERAMIC 0.1MF
C427	1-125-837-11	s	CAPACITOR,CHIP CERAMIC1MF/6.3V
C429	1-107-826-11	s	CAPACITOR,CHIP CERAMIC 0.1MF
CN401	1-793-797-21	o	CONNECTOR,BOARD TO BOARD
D401	8-719-058-24	s	DIODE RB501V-40TE17
D402	8-719-058-24	s	DIODE RB501V-40TE17
D403	8-719-036-94	s	DIODE RD5.6SB-T1
D404	8-719-058-24	s	DIODE RB501V-40TE17
D405	8-719-058-24	s	DIODE RB501V-40TE17
D406	8-719-914-43	s	DIODE DAN202K
FB401	1-500-451-11	s	MICRO INDUCTOR (CHIP) 41P750S
FB402	1-500-451-11	s	MICRO INDUCTOR (CHIP) 41P750S
IC401	8-759-655-55	s	IC UPD72012GB-003-3B4
IC402	8-759-697-26	s	IC RCV4-A1T-MASK-25
IC403	8-759-699-27	s	IC MAX890LESA-TG068
IC404	8-759-713-00	s	IC ST72T631K4M1-XX
IC405	8-759-582-91	s	IC S-80842ANNP-ED6-T2
Q401	8-729-029-14	s	TRANSISTOR DTC144EUA-T106
Q402	8-729-216-22	s	TRANSISTOR 2SA1162-G
Q403	8-729-029-14	s	TRANSISTOR DTC144EUA-T106
Q404	8-729-029-14	s	TRANSISTOR DTC144EUA-T106
Q405	8-729-029-14	s	TRANSISTOR DTC144EUA-T106
Q406	8-729-216-22	s	TRANSISTOR 2SA1162-G
Q407	8-729-029-14	s	TRANSISTOR DTC144EUA-T106
R401	1-216-809-11	s	RESISTOR,CHIP 100 1/16W 1608
R402	1-216-835-11	s	RESISTOR,CHIP 15K 1/16W
R403	1-216-823-11	s	RESISTOR,CHIP 1.5K 1/16W
R404	1-216-835-11	s	RESISTOR,CHIP 15K 1/16W
R406	1-216-799-11	s	RESISTOR,CHIP 15 1/16W 1608

(QA BOARD)

Ref. No. or Q'ty	Part No.	SP	Description
R407	1-216-799-11	s	RESISTOR,CHIP 15 1/16W 1608
R408	1-216-799-11	s	RESISTOR,CHIP 15 1/16W 1608
R409	1-216-799-11	s	RESISTOR,CHIP 15 1/16W 1608
R410	1-216-821-11	s	RESISTOR,CHIP 1.0K 1/16W(1608)
R411	1-216-857-11	s	RESISTOR,CHIP 1M 1/16W(1608)
R412	1-216-825-11	s	RESISTOR,CHIP 2.2K 1/16W 1608
R413	1-216-835-11	s	RESISTOR,CHIP 15K 1/16W
R414	1-216-835-11	s	RESISTOR,CHIP 15K 1/16W
R415	1-216-835-11	s	RESISTOR,CHIP 15K 1/16W
R416	1-216-835-11	s	RESISTOR,CHIP 15K 1/16W
R417	1-218-665-11	s	RESISTOR,CHIP 75 1/16W (1608)
R418	1-216-833-11	s	RESISTOR,CHIP 10K 1/16W (1608)
R419	1-216-830-11	s	RESISTOR,CHIP 5.6K 1/16W 1608
R420	1-216-833-11	s	RESISTOR,CHIP 10K 1/16W (1608)
R421	1-216-833-11	s	RESISTOR,CHIP 10K 1/16W (1608)
R422	1-216-799-11	s	RESISTOR,CHIP 15 1/16W 1608
R423	1-216-799-11	s	RESISTOR,CHIP 15 1/16W 1608
R424	1-216-799-11	s	RESISTOR,CHIP 15 1/16W 1608
R425	1-216-799-11	s	RESISTOR,CHIP 15 1/16W 1608
R426	1-216-853-11	s	RESISTOR,CHIP 470K 1/16W(1608)
R427	1-216-799-11	s	RESISTOR,CHIP 15 1/16W 1608
R428	1-216-799-11	s	RESISTOR,CHIP 15 1/16W 1608
R429	1-216-835-11	s	RESISTOR,CHIP 15K 1/16W
R430	1-216-835-11	s	RESISTOR,CHIP 15K 1/16W
R431	1-216-833-11	s	RESISTOR,CHIP 10K 1/16W (1608)
R432	1-216-823-11	s	RESISTOR,CHIP 1.5K 1/16W
R433	1-216-833-11	s	RESISTOR,CHIP 10K 1/16W (1608)
R434	1-216-845-11	s	RESISTOR,CHIP 100K 1/16W(1608)
R435	1-216-833-11	s	RESISTOR,CHIP 10K 1/16W (1608)
R436	1-216-821-11	s	RESISTOR,CHIP 1.0K 1/16W(1608)
R437	1-216-833-11	s	RESISTOR,CHIP 10K 1/16W (1608)
R438	1-216-827-11	s	RESISTOR,CHIP 3.3K 1/16W 1608
R439	1-216-829-11	s	RESISTOR,CHIP 4.7K 1/16W(1608)
R440	1-216-845-11	s	RESISTOR,CHIP 100K 1/16W(1608)
R441	1-216-841-11	s	RESISTOR,CHIP 47K 1/16W 1608
R442	1-216-841-11	s	RESISTOR,CHIP 47K 1/16W 1608
R443	1-216-821-11	s	RESISTOR,CHIP 1.0K 1/16W(1608)
R444	1-218-699-11	s	RESISTOR,CHIP 2.0K 1/16W(1608)
R445	1-216-825-11	s	RESISTOR,CHIP 2.2K 1/16W 1608
R446	1-216-809-11	s	RESISTOR,CHIP 100 1/16W 1608
R447	1-216-857-11	s	RESISTOR,CHIP 1M 1/16W(1608)
R448	1-216-833-11	s	RESISTOR,CHIP 10K 1/16W (1608)
R449	1-216-864-11	s	CONDUCTOR,CHIP (1608)
R450	1-216-823-11	s	RESISTOR,CHIP 1.5K 1/16W
R451	1-216-809-11	s	RESISTOR,CHIP 100 1/16W 1608
R452	1-216-809-11	s	RESISTOR,CHIP 100 1/16W 1608
R454	1-216-864-11	s	CONDUCTOR,CHIP (1608)
R455	1-216-839-11	s	RESISTOR,CHIP 33K 1/16W 1608
X401	1-781-163-11	s	VIBRATOR,OSCILLATOR
X402	1-767-340-11	s	VIBRATOR,CRYSTAL
X403	1-781-163-11	s	VIBRATOR,OSCILLATOR

QB BOARD

Ref. No. or Q'ty	Part No.	SP	Description
1pc	A-1275-200-A	s	MOUNTED CIRCUIT BOARD, QB
C501	1-124-779-00	s	CAPACITOR,ELECT 10MF/16V
C502	1-126-204-11	s	CAPACITOR,ELECT 47MF/16V(CHIP
C503	1-126-204-11	s	CAPACITOR,ELECT 47MF/16V(CHIP
C504	1-109-982-11	s	CAPACITOR,CHIP CERAMIC 1MF/10V
CN501	1-770-625-21	s	PIN, CONNECTOR 8P
CN502	1-815-279-11	s	CONNECTOR, (S) TERMINAL 4P
D501	8-719-036-94	s	DIODE RD5.6SB-T1
D502	8-719-036-94	s	DIODE RD5.6SB-T1
D503	8-719-036-94	s	DIODE RD5.6SB-T1
J501	1-565-795-11	s	JACK, PIN (PC BOARD)
L501	1-414-753-91	s	INDUCTOR 4.7UH
L502	1-412-363-11	s	FERRITE, EMI (SMD)
L503	1-412-363-11	s	FERRITE, EMI (SMD)
L504	1-412-363-11	s	FERRITE, EMI (SMD)
Q501	8-729-230-49	s	TRANSISTOR 2SC2712-YG
Q502	8-729-230-49	s	TRANSISTOR 2SC2712-YG
Q503	8-729-230-49	s	TRANSISTOR 2SC2712-YG
R501	1-216-837-11	s	RESISTOR,CHIP 22K 1/16W 1608
R502	1-216-624-11	s	RESISTOR,CHIP 75 1/10W(2012)
R503	1-216-837-11	s	RESISTOR,CHIP 22K 1/16W 1608
R504	1-216-821-11	s	RESISTOR,CHIP 1.0K 1/16W(1608)
R505	1-216-809-11	s	RESISTOR,CHIP 100 1/16W 1608
R506	1-216-837-11	s	RESISTOR,CHIP 22K 1/16W 1608
R507	1-216-624-11	s	RESISTOR,CHIP 75 1/10W(2012)
R508	1-216-837-11	s	RESISTOR,CHIP 22K 1/16W 1608
R509	1-216-809-11	s	RESISTOR,CHIP 100 1/16W 1608
R510	1-216-821-11	s	RESISTOR,CHIP 1.0K 1/16W(1608)
R511	1-216-837-11	s	RESISTOR,CHIP 22K 1/16W 1608
R512	1-216-624-11	s	RESISTOR,CHIP 75 1/10W(2012)
R513	1-216-837-11	s	RESISTOR,CHIP 22K 1/16W 1608
R514	1-216-809-11	s	RESISTOR,CHIP 100 1/16W 1608
R515	1-216-821-11	s	RESISTOR,CHIP 1.0K 1/16W(1608)

```
-------
V BOARD
-------
 Ref. No.
 or Q'ty  Part No.     SP Description

 1pc      A-1342-599-A s MOUNTED CIRCUIT BOARD, V

 CN701    1-770-619-11 o PIN, CONNECTOR 2P

 S701     1-762-984-11 s SWITCH, PUSH
```

5-4. Accessories

```
 Ref. No.
 or Q'ty  Part No.     SP Description

 1pc      1-476-555-11 s REMOTE COMMANDER (RM-PJ2)
                                              [VPL-CS3/CX2]
 1pc      9-885-010-99 s COVER, BATTERY (RM-PJ2)
                                              [VPL-CS3/CX2]
 1pc      1-476-556-11 s REMOTE COMMANDER (RM-PJM11)
                                              [VPL-CX3]
 1pc      9-885-005-85 s COVER, BATTERY (RM-PJM11)
                                              [VPL-CX3]
 1pc      1-500-386-21 s FILTER, CLAMP (FERRITE CORE)

 1pc      4-083-098-01 s INSTRUCTION (FERRITE CORE)
 1pc      1-790-081-31 s CABLE, USB           [VPL-CX3]
 1pc      1-791-992-21 s CABLE ASSY (15P D SUBX2)
 1pc    ⚠ ————————— s CORD, POWER
                         (See Sec.2-2-17. Warning on Power
                          Connection.)

 1pc      4-083-480-01 s PACK, CD-ROM         [VPL-CX3]

 1pc      4-082-023-01 s OPERATING INSTRUCTIONS
                         (JAPANESE/CHINESE)  [VPL-CS3]
 1pc      4-082-023-11 s OPERATING INSTRUCTIONS
                         (ENGLISH/FRENCH/SPANISH) [VPL-CS3]
 1pc      4-082-023-21 s OPERATING INSTRUCTIONS
                         (ITALIAN/GERMAN)    [VPL-CS3]
 1pc      4-083-281-01 s OPERATING INSTRUCTIONS
                         (JAPANESE/CHINESE)  [VPL-CX2]
 1pc      4-083-281-11 s OPERATING INSTRUCTIONS
                         (ENGLISH/FRENCH/SPANISH) [VPL-CX2]

 1pc      4-083-281-21 s OPERATING INSTRUCTIONS
                         (ITALIAN/GERMAN)    [VPL-CX2]
 1pc      4-083-288-01 s OPERATING INSTRUCTIONS
                         (JAPANESE/CHINESE)  [VPL-CX3]
 1pc      4-083-288-11 s OPERATING INSTRUCTIONS
                         (ENGLISH/FRENCH/SPANISH) [VPL-CX3]
 1pc      4-083-288-21 s OPERATING INSTRUCTIONS
                         (ITALIAN/GERMAN)    [VPL-CX3]
 1pc      4-083-790-01 s INSTRUCTIONS FOR MEMORY STICK
                         (JAPANESE/CHINESE)  [VPL-CX3]

 1pc      4-083-790-11 s INSTRUCTIONS FOR MEMORY STICK
                         (ENGLISH/FRENCH/SPANISH) [VPL-CX3]
 1pc      4-083-790-21 s INSTRUCTIONS FOR MEMORY STICK
                         (ITALIAN/GERMAN)    [VPL-CX3]
 1pc      4-083-481-01 s INSTRUCTIONS FOR CD-ROM
                         (JAPANESE/ENGLISH)  [VPL-CX3]
 1pc      A-1501-943-A s MS ASSY              [VPL-CX3]
```

Section 6
Block Diagrams

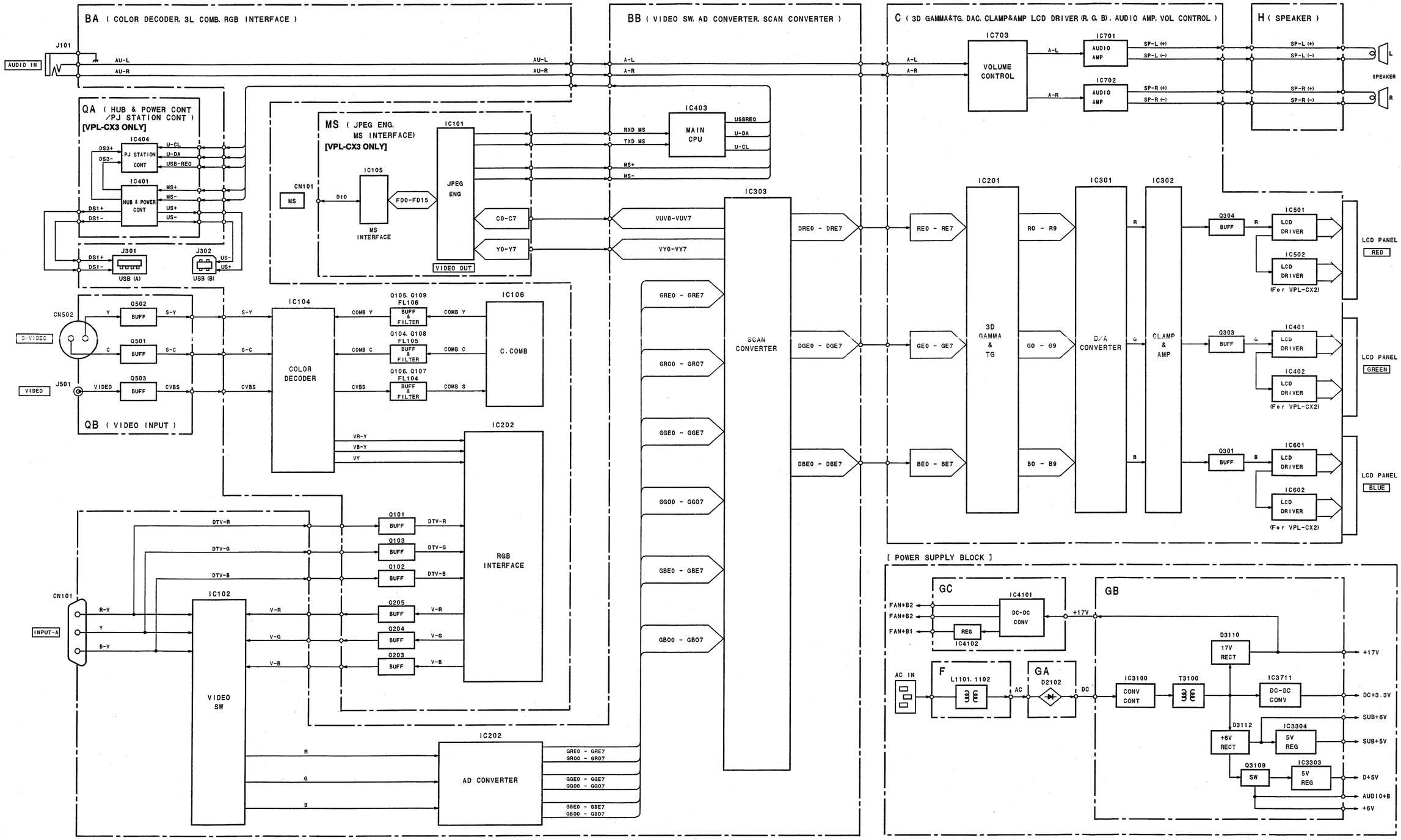

Overall Block

(VPL-CX3 ONLY)

MS (JPEG ENG, FLASH ROM, SDRAM)

BB (MAIN CPU, A/D CONVERTER, SCAN CONVERTER, SDRAM, RGB INPUT, SYNC SEP)

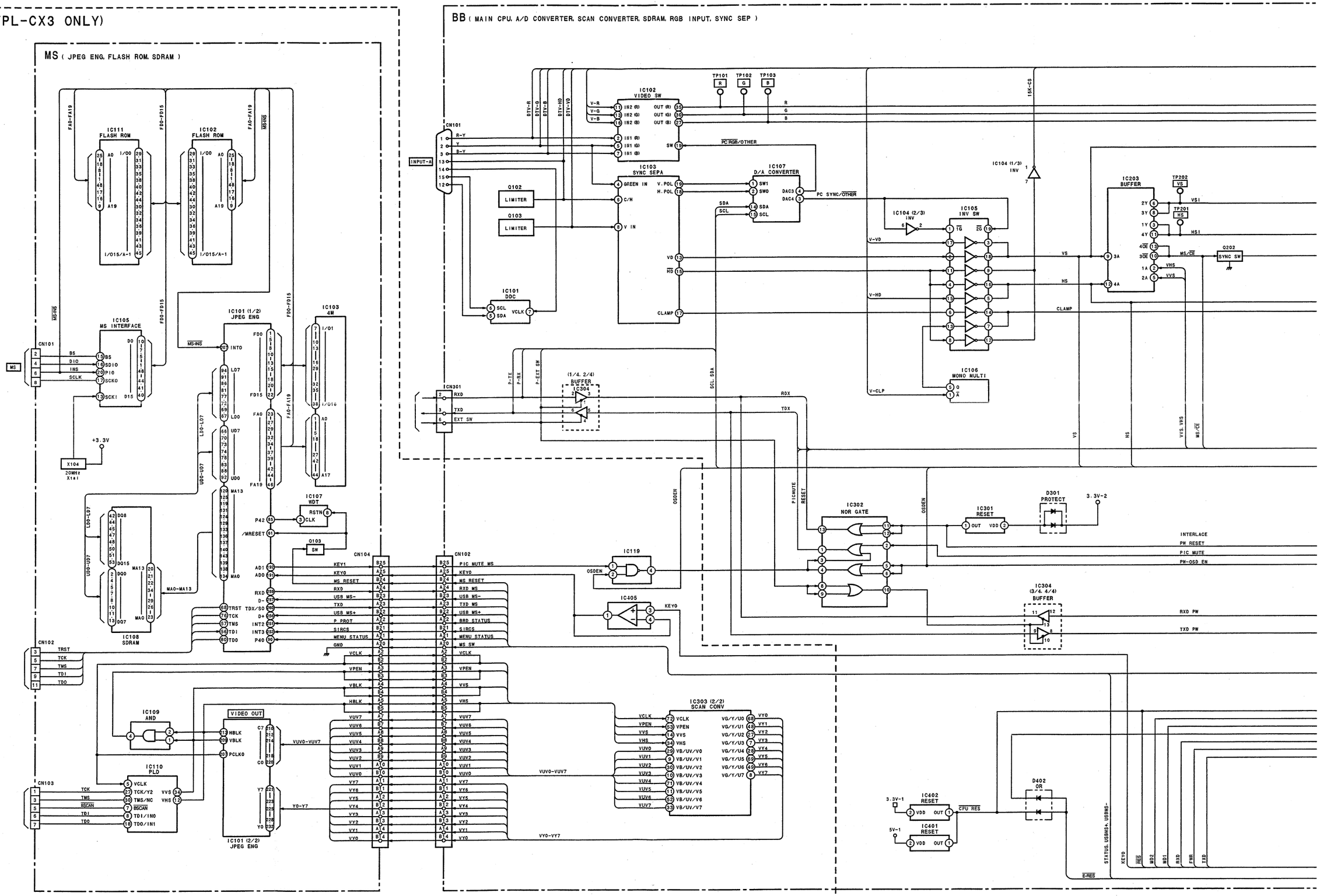

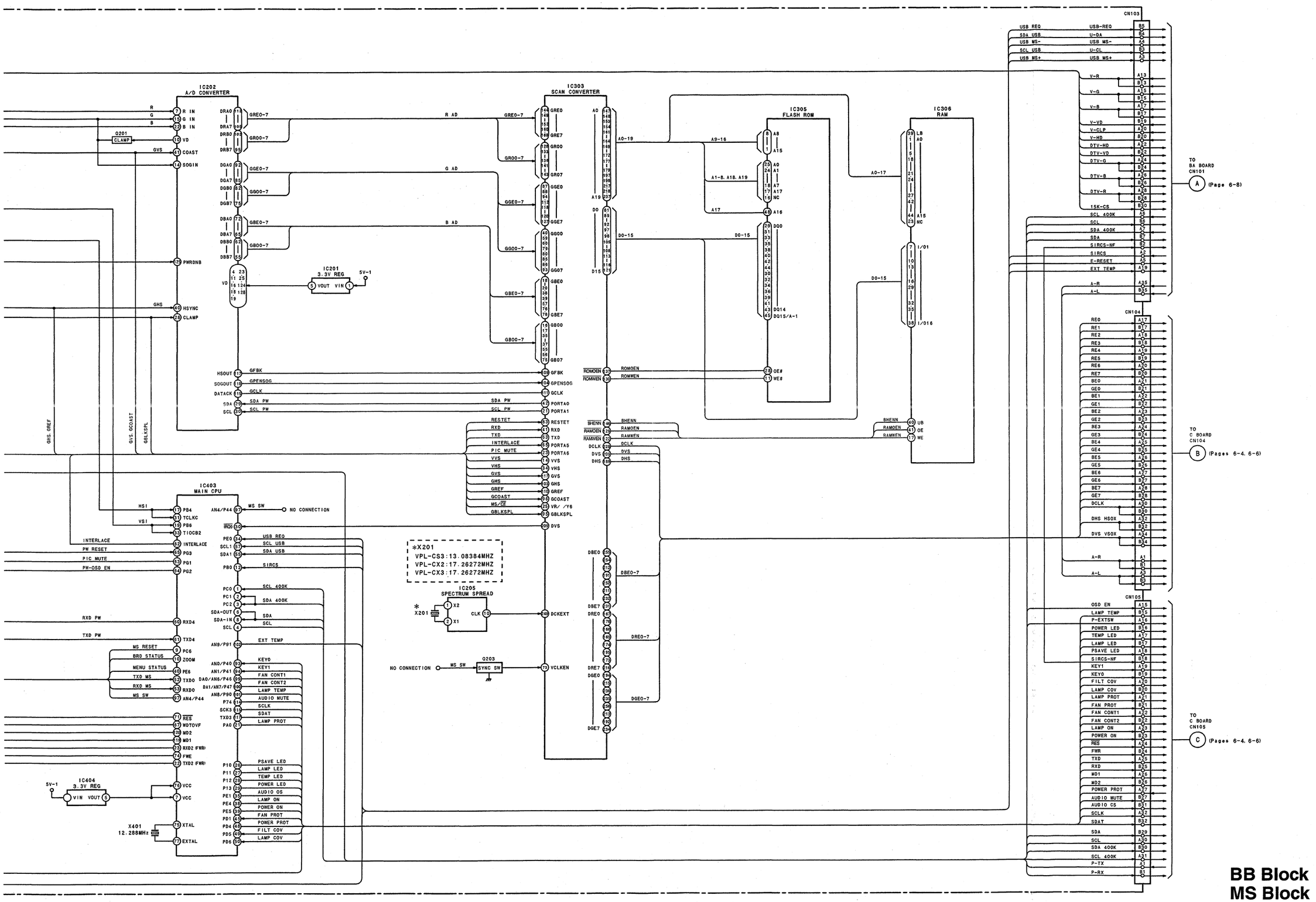

BB Block
MS Block

For VPL-CS3

C (LCD DRIVE, RGB AMP, AUDIO AMP, 12CH DAC, TIMING GENERATER, 3D GAMMA)

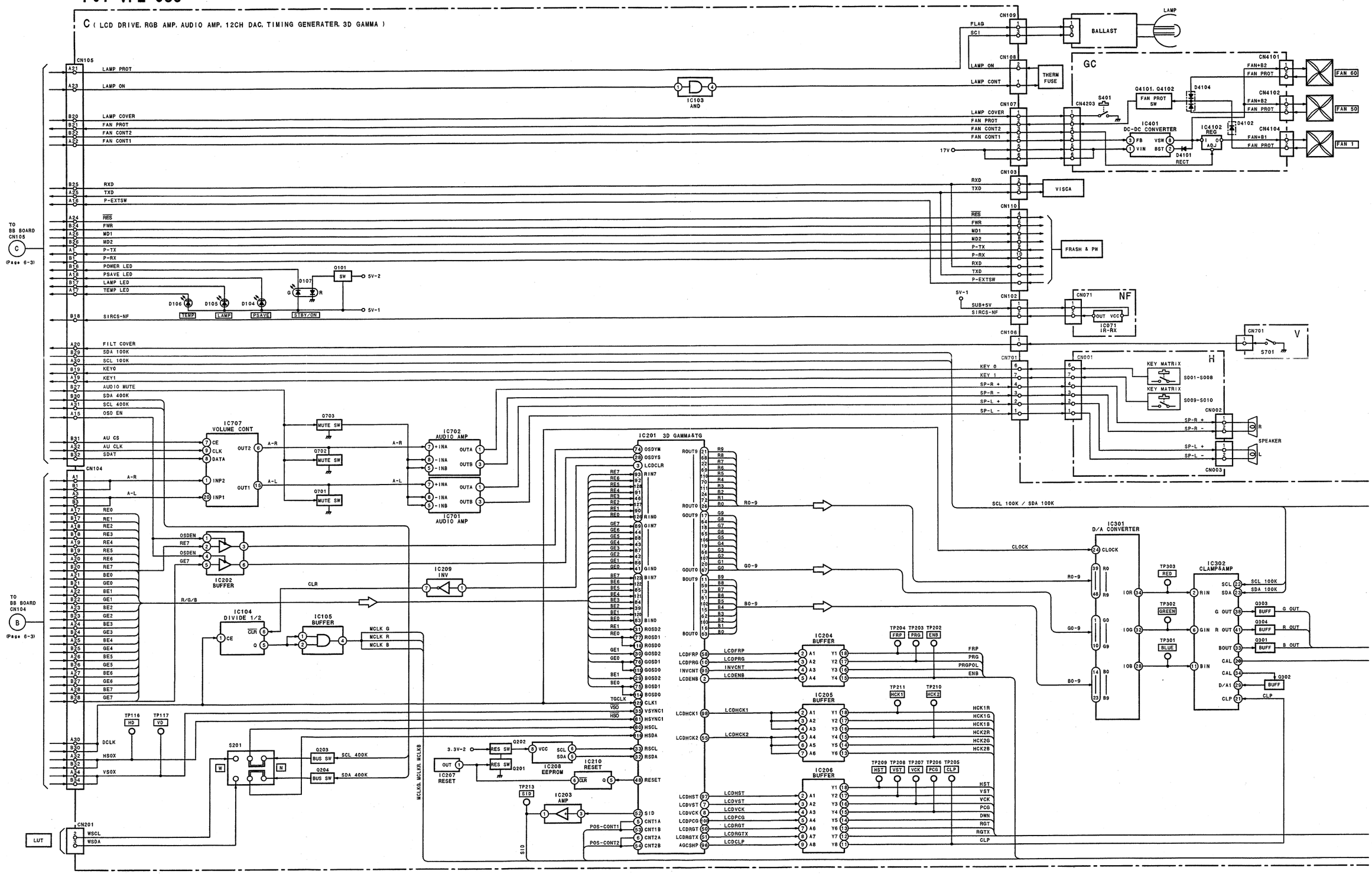

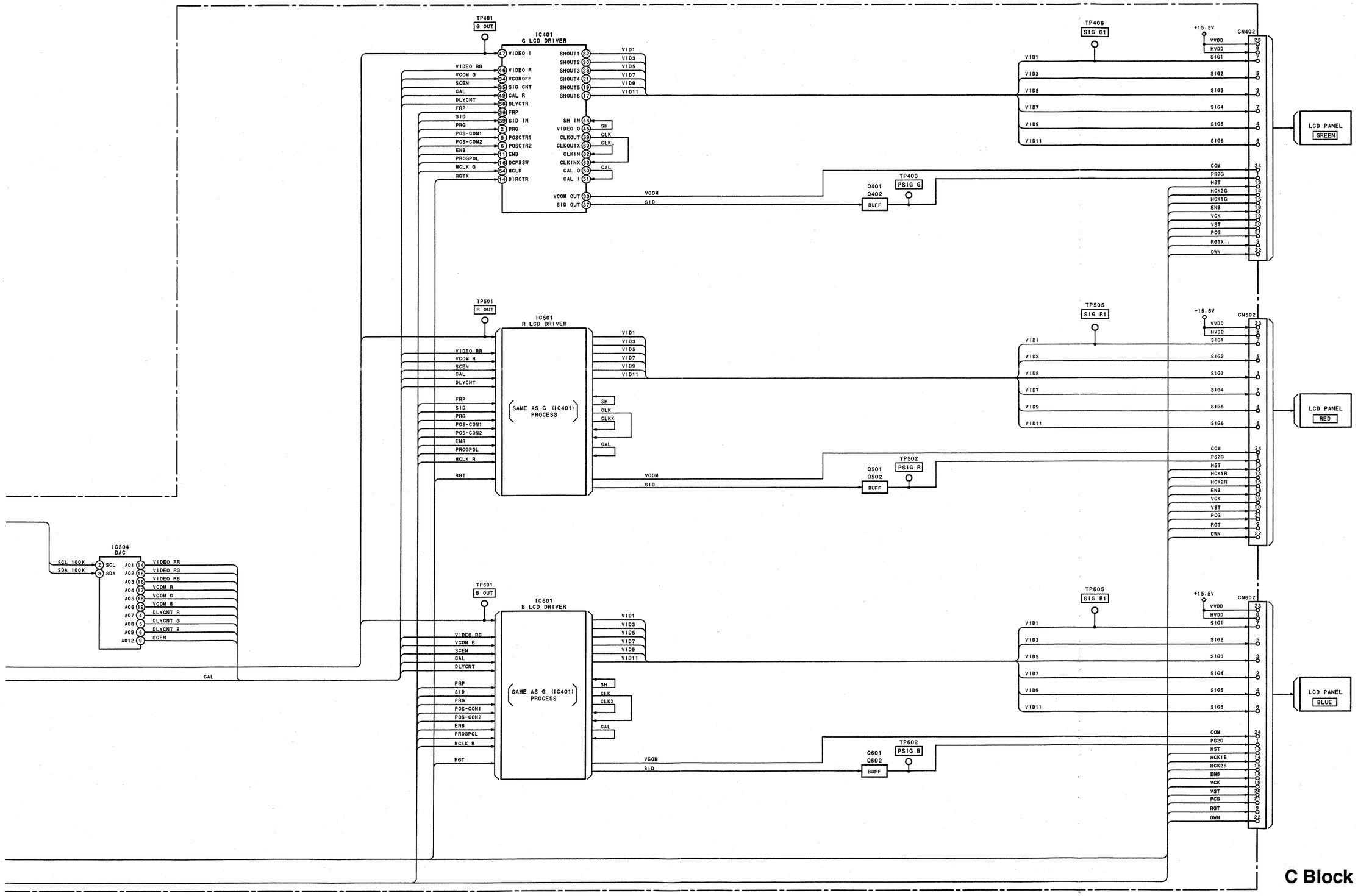
TP401
G OUT
IC401
G LCD DRIVER
VIDEO I
VIDEO RG
VIDEO R
VCOM G
VCOMOFF
SCEN
SIG CNT
CAL
CAL R
DLYCNT
DLYCTR
FRP
FRP
SID
SID IN
PRG
PRG
POS-CON1
POSCTR1
POS-CON2
POSCTR2
ENB
ENB
PROGPOL
DCFBSW
MCLK G
MCLK
RGTX
DIRCTR
SHOUT1
SHOUT2
SHOUT3
SHOUT4
SHOUT5
SHOUT6
VID1
VID3
VID5
VID7
VID9
VID11
SH IN
VIDEO O
CLKOUT
CLKOUTX
CLKIN
CLKINX
CAL O
CAL I
SH
CLK
CLKX
CAL
VCOM OUT
SID OUT
VCOM
SID
Q401
Q402
BUFF
TP403
PSIG G
TP406
SIG G1
+15.5V
CN402
VVDD
HVDD
SIG1
SIG2
SIG3
SIG4
SIG5
SIG6
COM
PS2G
HST
HCK2G
HCK1G
ENB
VCK
VST
PCG
RGTX
DWN
LCD PANEL
GREEN
TP501
R OUT
IC501
R LCD DRIVER
VIDEO RR
VCOM R
SCEN
CAL
DLYCNT
FRP
SID
PRG
POS-CON1
POS-CON2
ENB
PROGPOL
MCLK R
RGT
SAME AS G (IC401) PROCESS
TP502
PSIG R
Q501
Q502
TP505
SIG R1
CN502
LCD PANEL
RED
IC304
DAC
SCL 100K
SDA 100K
SCL
SDA
A01
A02
A03
A04
A05
A06
A07
A08
A09
A012
VIDEO RR
VIDEO RG
VIDEO RB
VCOM R
VCOM G
VCOM B
DLYCNT R
DLYCNT G
DLYCNT B
SCEN
CAL
TP601
B OUT
IC601
B LCD DRIVER
VIDEO BB
VCOM B
SCEN
CAL
DLYCNT
FRP
SID
PRG
POS-CON1
POS-CON2
ENB
PROGPOL
MCLK B
RGT
SAME AS G (IC401) PROCESS
TP602
PSIG B
Q601
Q602
TP605
SIG B1
CN602
LCD PANEL
BLUE

C Block

For VPL-CX2/VPL-CX3

C (LCD DRIVE, RGB AMP, AUDIO AMP, 12CH DAC, TIMING GENERATER, 3D GAMMA)

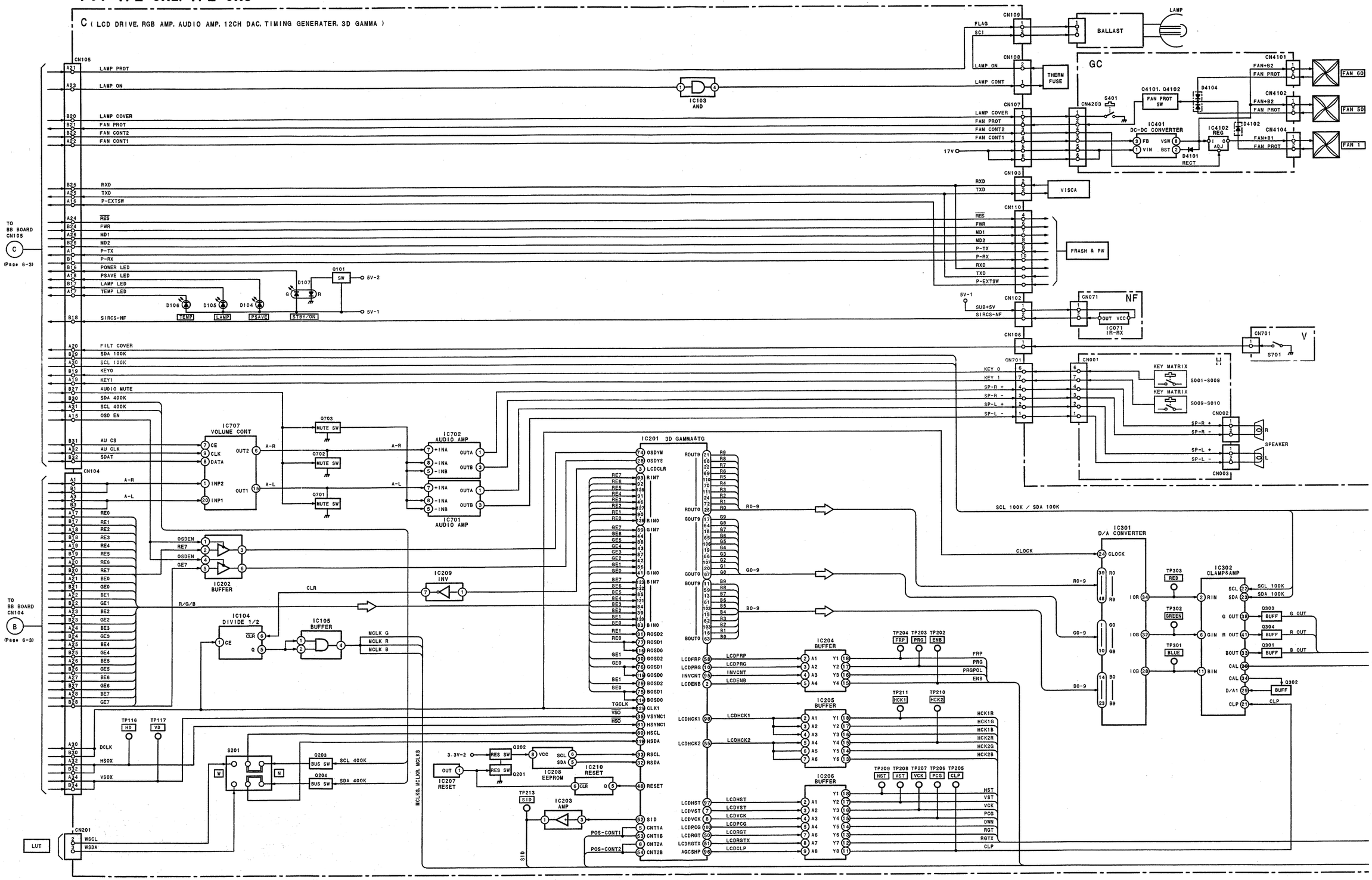

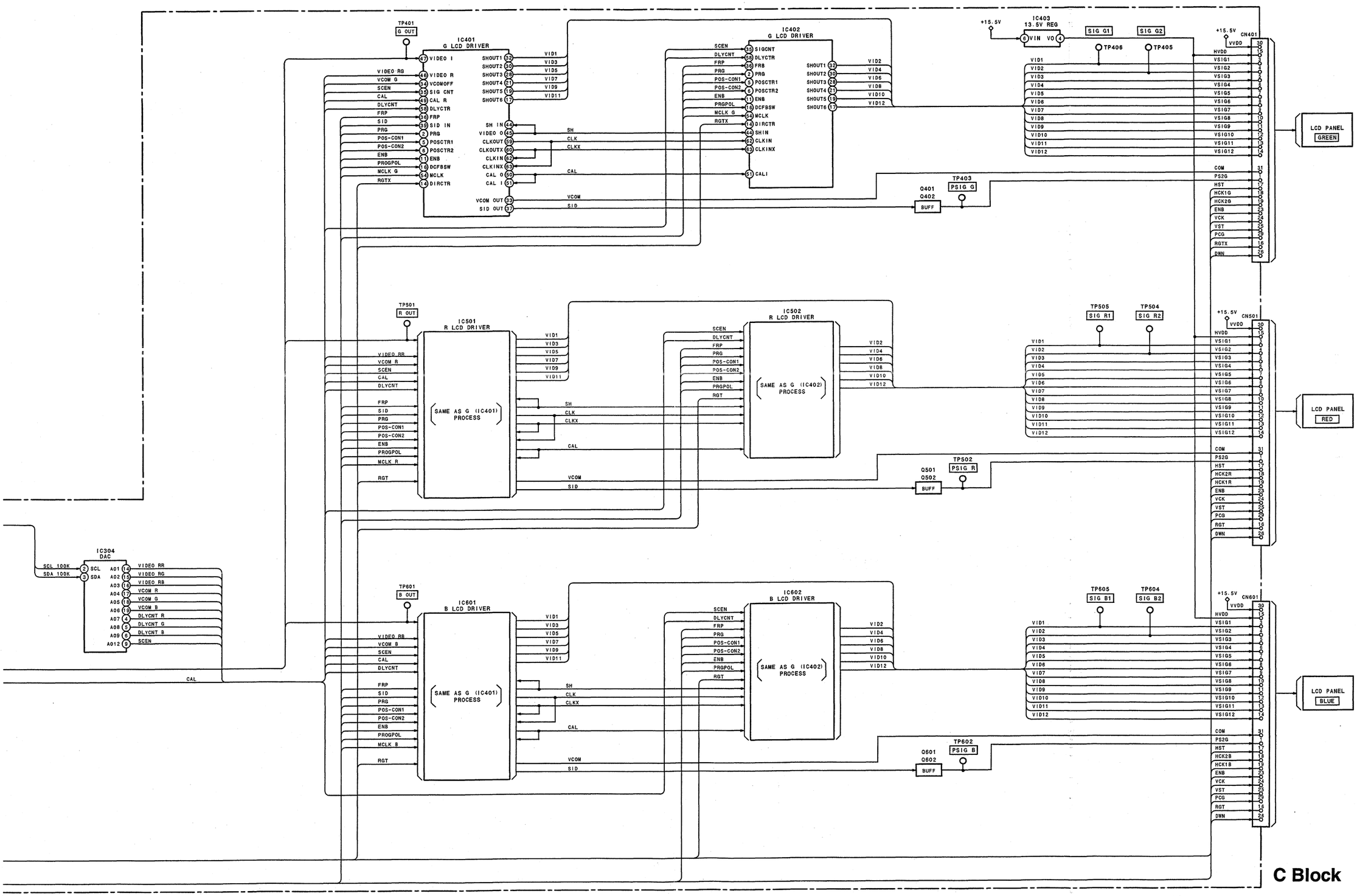
TP401
G OUT
IC401
G LCD DRIVER
VIDEO I
VIDEO RG
VCOM G
SCEN
CAL
DLYCNT
FRP
SID
PRG
POS-CON1
POS-CON2
ENB
PROGPOL
MCLK G
RGTX
VIDEO R
VCONOFF
SIG CNT
CAL R
DLYCTR
FRP
SID IN
PRG
POSCTR1
POSCTR2
ENB
DCFBSW
MCLK
DIRCTR
SHOUT1
SHOUT2
SHOUT3
SHOUT4
SHOUT5
SHOUT6
SH IN
VIDEO O
CLKOUT
CLKOUTX
CLKIN
CLKINX
CAL O
CAL I
VCOM OUT
SID OUT
VID1
VID3
VID5
VID7
VID9
VID11
SH
CLK
CLKX
CAL
VCOM
SID
IC402
G LCD DRIVER
SCEN
DLYCNT
FRP
PRG
POS-CON1
POS-CON2
ENB
PRGPOL
MCLK G
RGTX
SIGCNT
DLYCTR
FRB
PRG
POSCTR1
POSCTR2
ENB
DCFBSW
MCLK
DIRCTR
SHIN
CLKIN
CLKINX
CALI
SHOUT1
SHOUT2
SHOUT3
SHOUT4
SHOUT5
SHOUT6
VID2
VID4
VID6
VID8
VID10
VID12
+15.5V
IC403
13.5V REG
VIN
VO
SIG G1
SIG G2
TP406
TP405
CN401
VVDD
HVDD
VSIG1
VSIG2
VSIG3
VSIG4
VSIG5
VSIG6
VSIG7
VSIG8
VSIG9
VSIG10
VSIG11
VSIG12
COM
PS2G
HST
HCK1G
HCK2G
ENB
VCK
VST
PCG
RGTX
DWN
LCD PANEL
GREEN
Q401
Q402
BUFF
TP403
PSIG G
TP501
R OUT
IC501
R LCD DRIVER
VIDEO RR
VCOM R
SCEN
CAL
DLYCNT
FRP
SID
PRG
POS-CON1
POS-CON2
ENB
PROGPOL
MCLK R
RGT
SAME AS G (IC401) PROCESS
IC502
R LCD DRIVER
SAME AS G (IC402) PROCESS
TP505
SIG R1
TP504
SIG R2
CN501
HCK2R
HCK1R
LCD PANEL
RED
Q501
Q502
TP502
PSIG R
IC304
DAC
SCL 100K
SDA 100K
SCL
SDA
A01
A02
A03
A04
A05
A06
A07
A08
A09
A012
VIDEO RR
VIDEO RG
VIDEO RB
VCOM R
VCOM G
VCOM B
DLYCNT R
DLYCNT G
DLYCNT B
SCEN
CAL
TP601
B OUT
IC601
B LCD DRIVER
VIDEO RB
VCOM B
SCEN
CAL
DLYCNT
FRP
SID
PRG
POS-CON1
POS-CON2
ENB
PROGPOL
MCLK B
RGT
SAME AS G (IC401) PROCESS
IC602
B LCD DRIVER
SAME AS G (IC402) PROCESS
TP605
SIG B1
TP604
SIG B2
CN601
HCK2B
HCK1B
LCD PANEL
BLUE
Q601
Q602
TP602
PSIG B

C Block

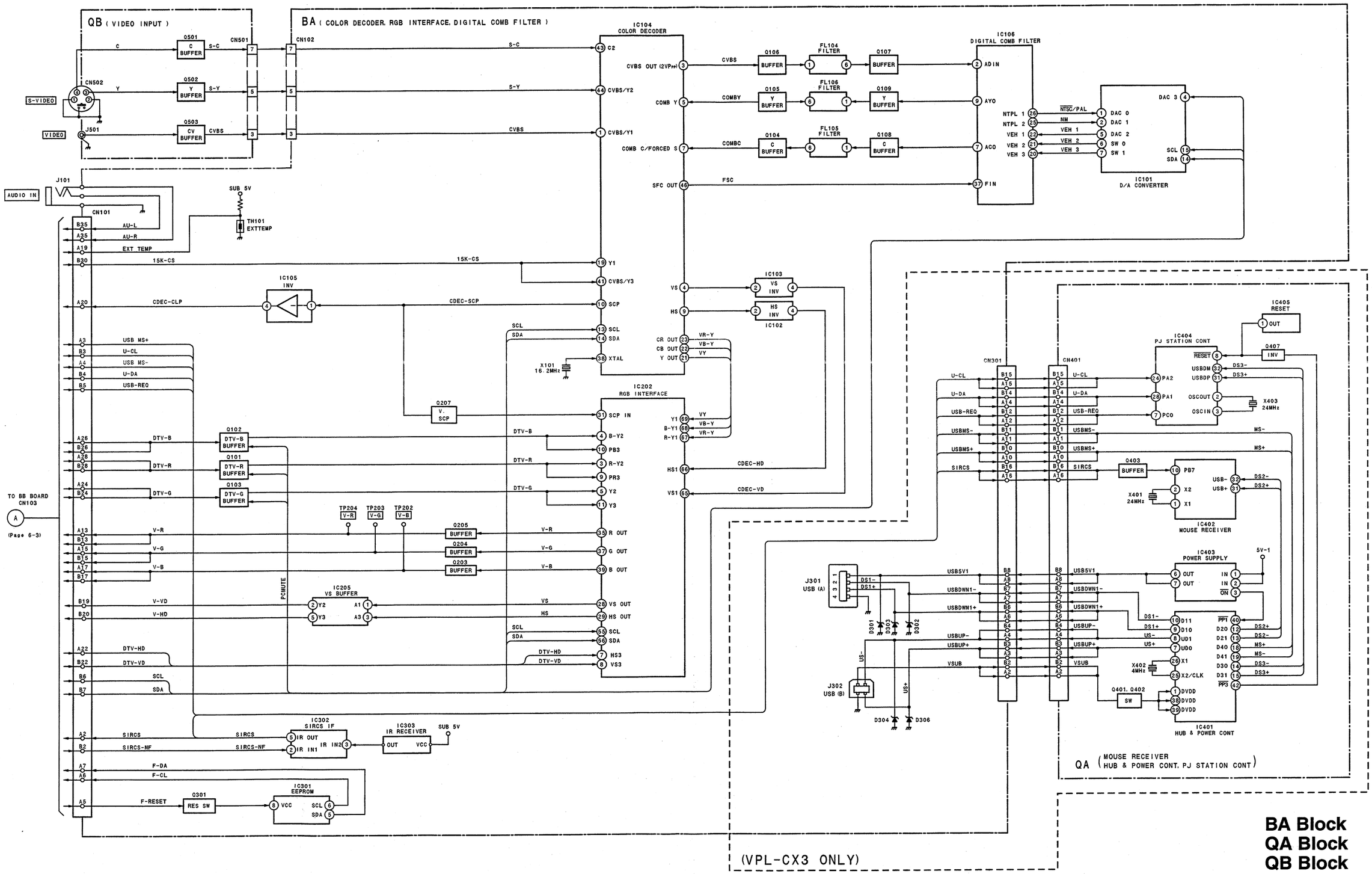
QB (VIDEO INPUT)
BA (COLOR DECODER, RGB INTERFACE, DIGITAL COMB FILTER)
S-VIDEO
VIDEO
AUDIO IN
CN502
J501
J101
CN101
Q501 C BUFFER
Q502 Y BUFFER
Q503 CV BUFFER
CN501
CN102
TH101 EXTTEMP
SUB 5V
IC104 COLOR DECODER
IC106 DIGITAL COMB FILTER
IC101 D/A CONVERTER
IC105 INV
IC103 VS INV
IC102 HS INV
IC202 RGB INTERFACE
X101 16.2MHz
Q207 V. SCP
Q102 DTV-B BUFFER
Q101 DTV-R BUFFER
Q103 DTV-G BUFFER
TP204 V-R
TP203 V-G
TP202 V-B
Q205 BUFFER
Q204 BUFFER
Q203 BUFFER
IC205 VS BUFFER
PCMUTE
IC302 SIRCS I/F
IC303 IR RECEIVER
IC301 EEPROM
Q301 RES SW
TO BB BOARD CN103
(Page 6-3)
Q106 BUFFER
Q105 Y BUFFER
Q104 C BUFFER
Q107 BUFFER
Q109 Y BUFFER
Q108 C BUFFER
FL104 FILTER
FL106 FILTER
FL105 FILTER
IC405 RESET
IC404 PJ STATION CONT
Q407 INV
CN301
CN401
Q403 BUFFER
X401 24MHz
IC402 MOUSE RECEIVER
IC403 POWER SUPPLY
J301 USB (A)
J302 USB (B)
D301
D303
D302
D304
D306
X402 4MHz
Q401, Q402 SW
IC401 HUB & POWER CONT
X403 24MHz
QA (MOUSE RECEIVER HUB & POWER CONT, PJ STATION CONT)
(VPL-CX3 ONLY)
BA Block
QA Block
QB Block

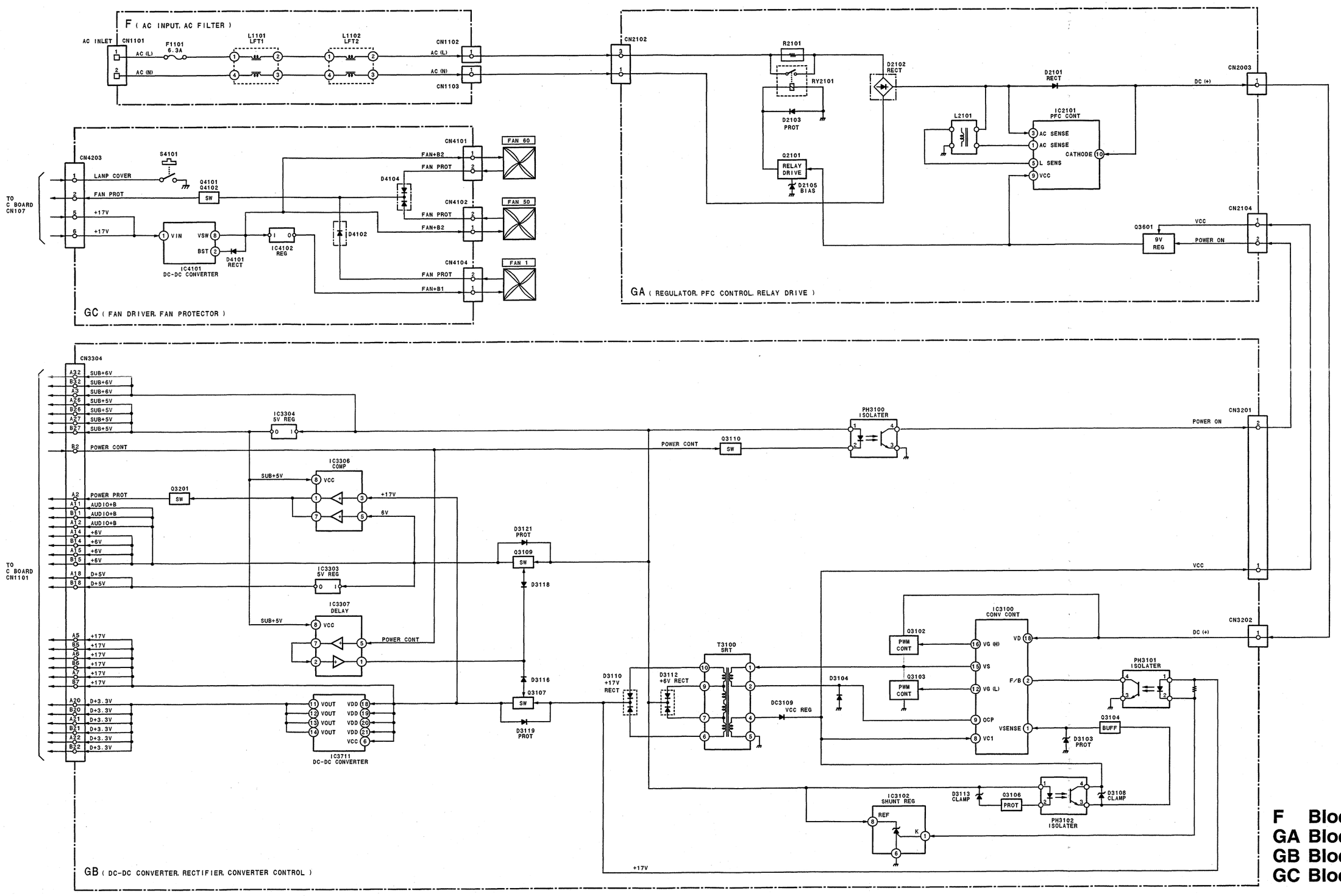

F Block
GA Block
GB Block
GC Block

Section 7
Diagrams

Note:
- Parts marked " * " differ according to the model/destination. Refer to the mount table for each function.
- The parts marked " # " on schematic diagrams are not mounted.
- All capacitors are in µF unless otherwise noted. pF: µµF 50WV or less are not indicated except for electrolytics.
- All electrolytics are in 50 V unless otherwise specified.
- : fusible resistor
- : nonflammable resistor
- Δ : internal component
- : panel designation and adjustment for repair
- Caution when replacing chip parts
  New parts must be attached after removal of the chip.
  Be careful not to heat the minus side of a tantalum capacitor, because it is easily damaged by the heat.

Reference information

RESISTOR	RN	: METAL FILM
	RC	: SOLID
	FPRD	: NONFLAMMABLE CARBON
	FUSE	: NONFLAMMABLE FUSIBLE
	RS	: NONFLAMMABLE METAL OXIDE
	RB	: NONFLAMMABLE CEMENT
	RW	: NONFLAMMABLE WIREWOUND
	※	: ADJUSTMENT RESISTOR
COIL	LF-8L	: MICRO INDUCTOR
CAPACITOR	TA	: TANTALUM
	PS	: STYROL
	PP	: POLYPROPYLENE
	PT	: MYLAR
	MPS	: METALIZED POLYESTER
	MPP	: METALIZED POLYPROPYLENE
	ALB	: BIPOLAR
	ALT	: HIGH TEMPERATURE
	ALR	: HIGH RIPPLE

[Measuring conditions, voltage and waveform]
- A voltage value is the reference value between the measurement point and the earth, when the RGB color bar signal is received from the color bar generator (digital multi-meter used: 10 M ohms/V DC).
- Unit of voltage is V (volt).
- : B+line
- : B– line
- Voltage variations may occur due to normal production tolerances.
- ★ : Measurement disabled.
- Circled numbers indicate the reference waveform.
- : Signal path.

The components identified marked ⚠ are critical for safety.
Replace only with the part number specified.

Les composants identifiés par la marque ⚠ sont critiques pour la sécurité.
Ne les remplacer que par une pièce portant le numéro spécifié.

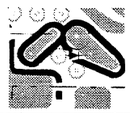

NOTE:
The circuit indicated as shown on the left contains high voltages of over 600 Vp-p. Take care to avoid electric shock during inspection or repair work.

7-1

7-1. Frame Schematic Diagram

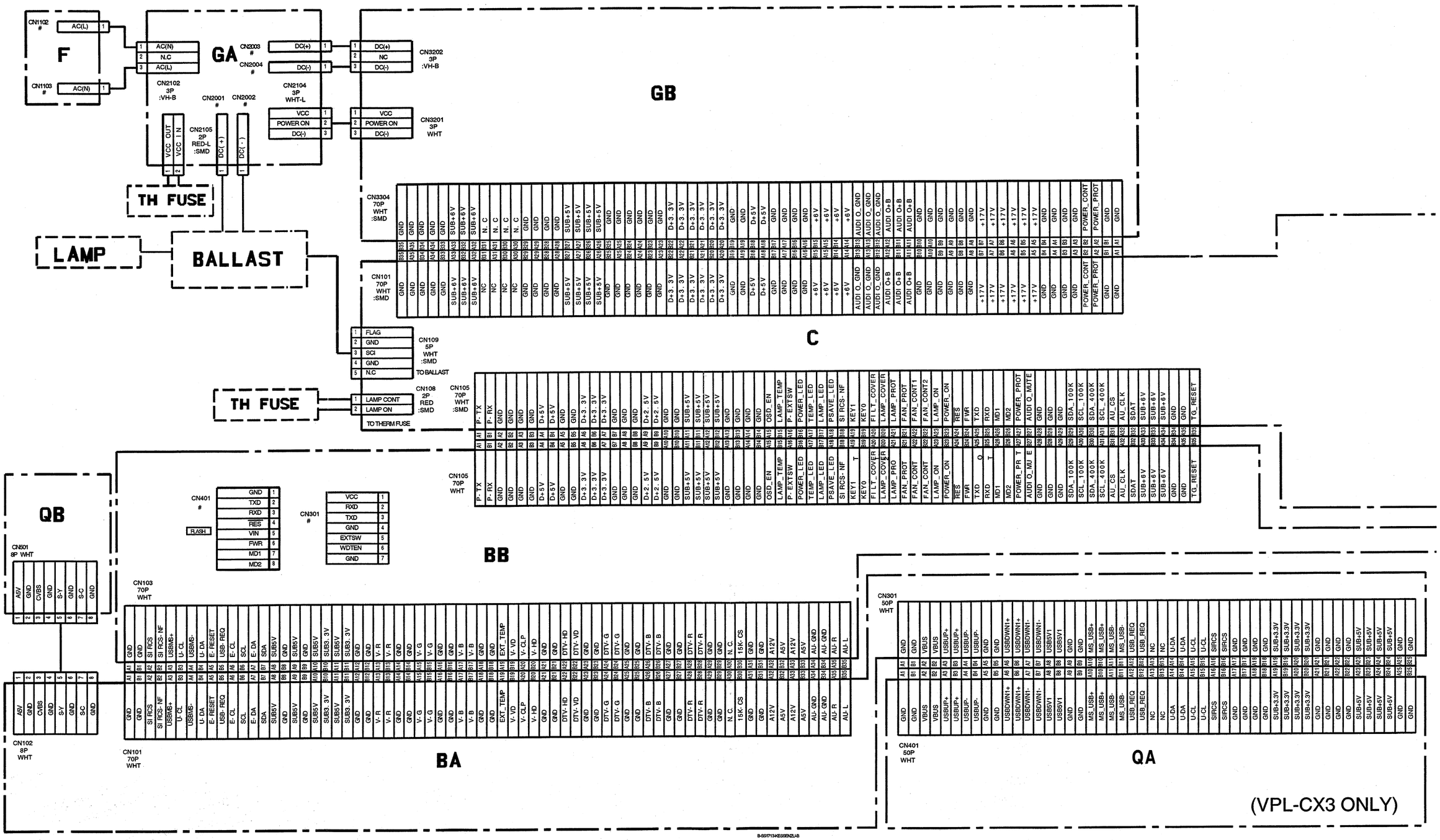

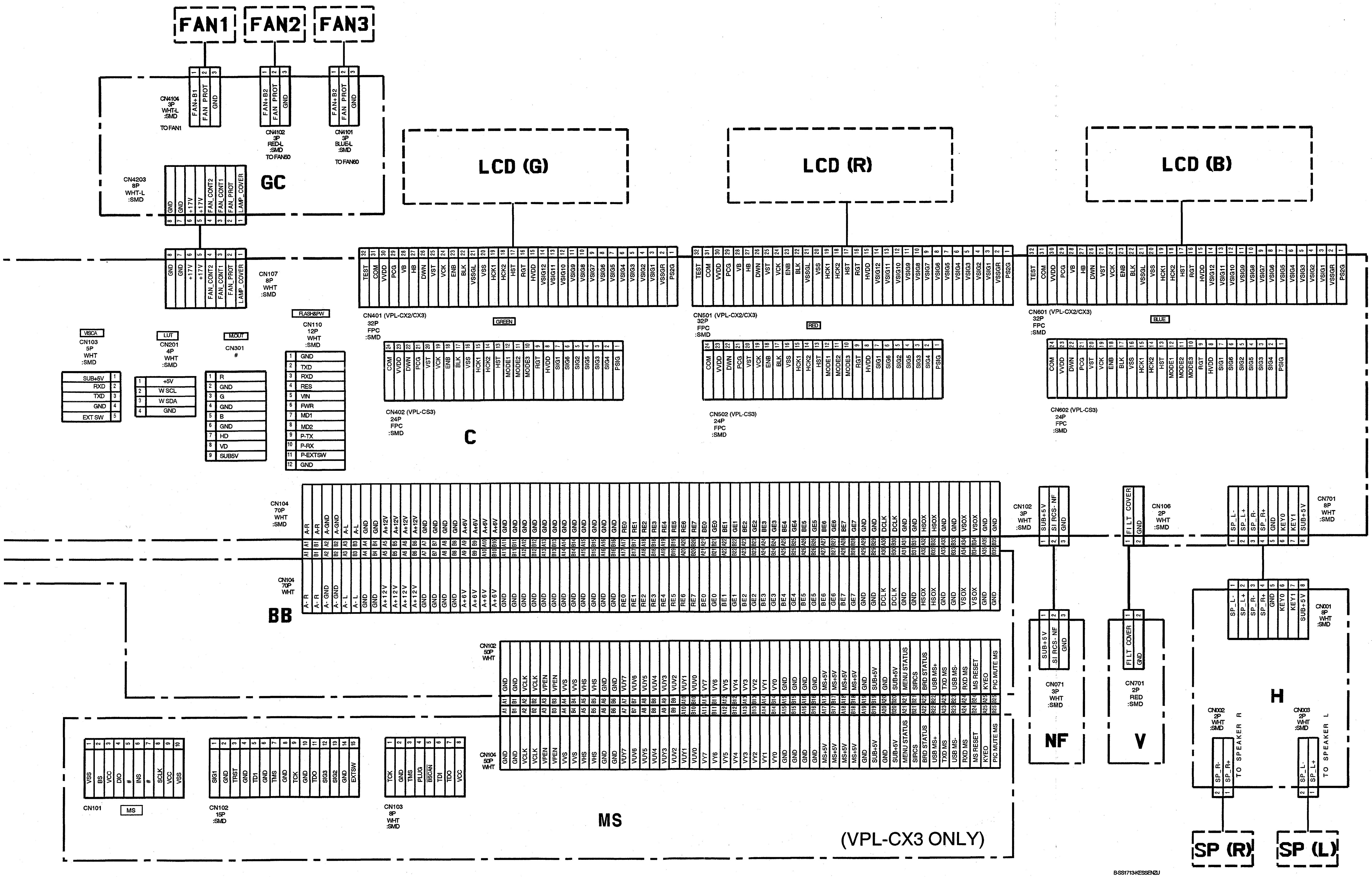
FAN1
FAN2
FAN3
CN4104 3P WHT-L :SMD TO FAN1
CN4102 3P RED-L :SMD TO FAN50
CN4101 3P BLUE-L :SMD TO FAN60
FAN+B1 FAN PROT GND
FAN+B2 FAN PROT GND
CN4203 8P WHT-L :SMD
GND GND +17V +17V FAN_CONT2 FAN_CONT1 FAN_PROT LAMP_COVER
GC
CN107 8P WHT :SMD
LCD (G)
LCD (R)
LCD (B)
CN401 (VPL-CX2/CX3) 32P FPC :SMD
GREEN
CN402 (VPL-CS3) 24P FPC :SMD
CN501 (VPL-CX2/CX3) 32P FPC :SMD
RED
CN502 (VPL-CS3) 24P FPC :SMD
CN601 (VPL-CX2/CX3) 32P FPC :SMD
BLUE
CN602 (VPL-CS3) 24P FPC :SMD
TEST COM VVDD PCG VB HB DWN VST VCK ENB BLK VSSGL VSS HCK1 HCK2 HST RGT HVDD VSIG12 VSIG11 VSIG10 VSIG9 VSIG8 VSIG7 VSIG6 VSIG5 VSIG4 VSIG3 VSIG2 VSIG1 VSSGR PS2G
COM VVDD DWN PCG VST VCK ENB BLK VSS HCK1 HCK2 HST MODE1 MODE2 MODE3 RGT HVDD SIG1 SIG6 SIG2 SIG5 SIG3 SIG4 PSIG
C
VISCA
CN103 5P WHT :SMD
SUB+5V RXD TXD GND EXT SW
LUT
CN201 4P WHT :SMD
+5V W SCL W SDA GND
M.OUT
CN301 #
R GND G GND B GND HD VD SUB5V
FLASH&PW
CN110 12P WHT :SMD
GND TXD RXD RES VIN FWR MD1 MD2 P-TX P-RX P-EXTSW GND
CN104 70P WHT :SMD
CN104 70P WHT
A-R A-R A-GND A-GND A-L A-L GND GND A+12V A+12V A+12V A+12V GND GND GND GND A+6V A+6V A+6V A+6V GND GND GND GND GND GND GND GND GND GND GND GND RE0 RE1 RE2 RE3 RE4 RE5 RE6 RE7 BE0 GE0 BE1 GE1 BE2 GE2 BE3 GE3 BE4 GE4 BE5 GE5 BE6 GE6 BE7 GE7 GND GND DCLK DCLK GND GND HSOX HSOX GND GND VSOX VSOX GND GND
BB
CN102 50P WHT
CN104 50P WHT
GND GND VCLK VCLK VPEN VPEN VVS VVS VHS VHS GND GND VUY7 VUV6 VUY5 VUV4 VUY3 VUV2 VUY1 VUV0 VY7 VY6 VY5 VY4 VY3 VY2 VY1 VY0 GND GND GND GND MS+5V MS+5V MS+5V MS+5V GND SUB+5V GND SUB+5V MENU STATUS SIRCS BRD STATUS USB MS+ TXD MS USB MS- RXD MS MS RESET KYEO PIC MUTE MS
CN101
MS
VSS BS VCC DIO # INS # SCLK VCC VSS
CN102 15P :SMD
SIG1 GND TRST GND TD1 GND TMS GND TCK GND TDO SIG3 SIG2 GND EXTSW
CN103 8P WHT :SMD
TCK GND TMS PLUG BSCAN TDI TDO VCC
MS
(VPL-CX3 ONLY)
CN102 3P WHT :SMD
SUB+5V SI RCS- NF GND
CN071 3P WHT :SMD
NF
CN106 2P WHT :SMD
FILT COVER GND
CN701 2P RED :SMD
V
CN701 8P WHT :SMD
SP_L- SP_L+ SP_R- SP_R+ GND KEY0 KEY1 SUB+5V
CN001 8P WHT :SMD
H
CN002 2P WHT :SMD
SP_R- SP_R+ TO SPEAKER R
CN003 2P WHT :SMD
SP_L- SP_L+ TO SPEAKER L
SP (R)
SP (L)
B-SS1713-KESSENZU

1
2
3
4
5

7-2. Schematic Diagrams and Printed Wiring Boards

BA Board

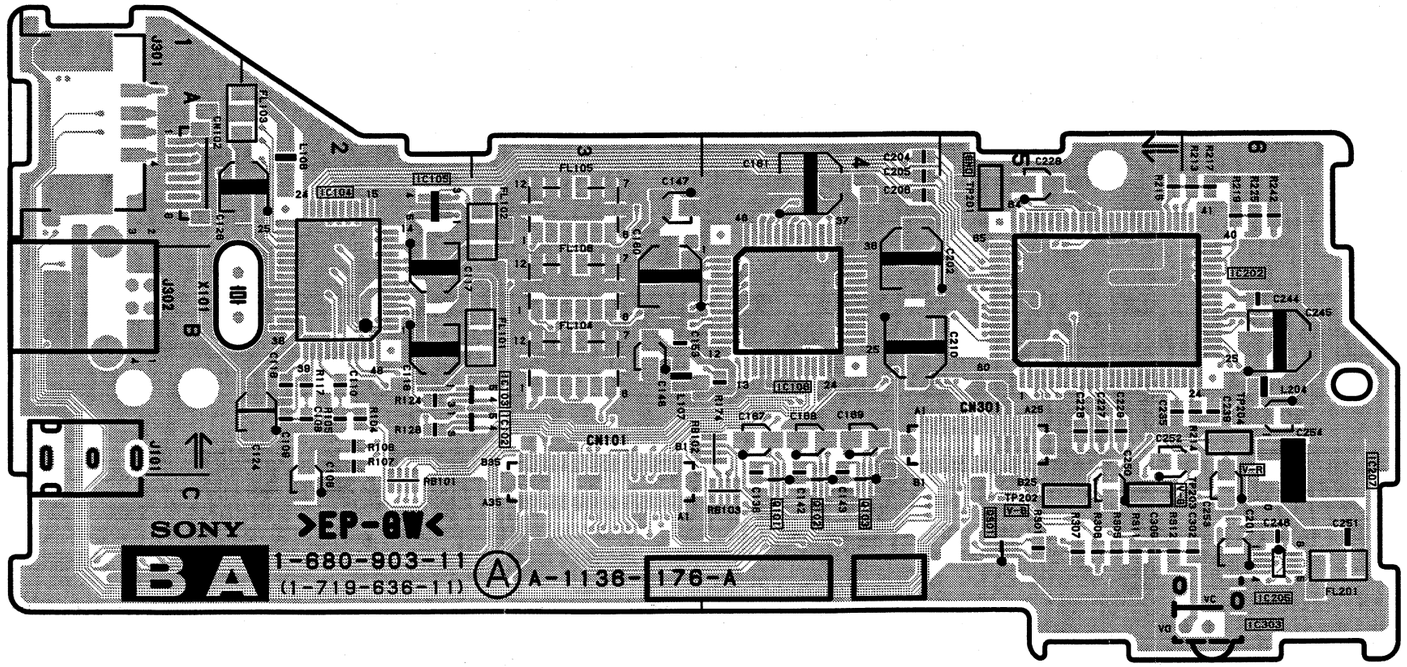

BA -A SIDE-
SUFFIX: -11

BA Board

IC101	*A-2	D101	*A-1
IC102	B-3	D102	*A-1
IC103	B-3	D103	*B-4
IC104	A-2	D201	*A-6
IC105	A-2	D301	*C-1
IC106	B-4	D302	*C-1
IC202	B-6	D303	*C-1
IC205	C-6	D304	*C-1
IC207	B-6	D305	*B-1
IC301	*A-5	D306	*C-1
IC302	*A-5		
IC303	C-6	TP201	A-5
		TP202	C-5
Q101	C-4	TP203	C-6
Q102	C-4	TP204	B-6
Q103	C-4		
Q104	*C-3	*:B Side mount	
Q105	*B-3		
Q106	*B-3		
Q107	*B-3		
Q108	*C-3		
Q109	*B-3		
Q203	*B-5		
Q204	*B-6		
Q205	*B-6		
Q207	*C-6		
Q301	C-5		

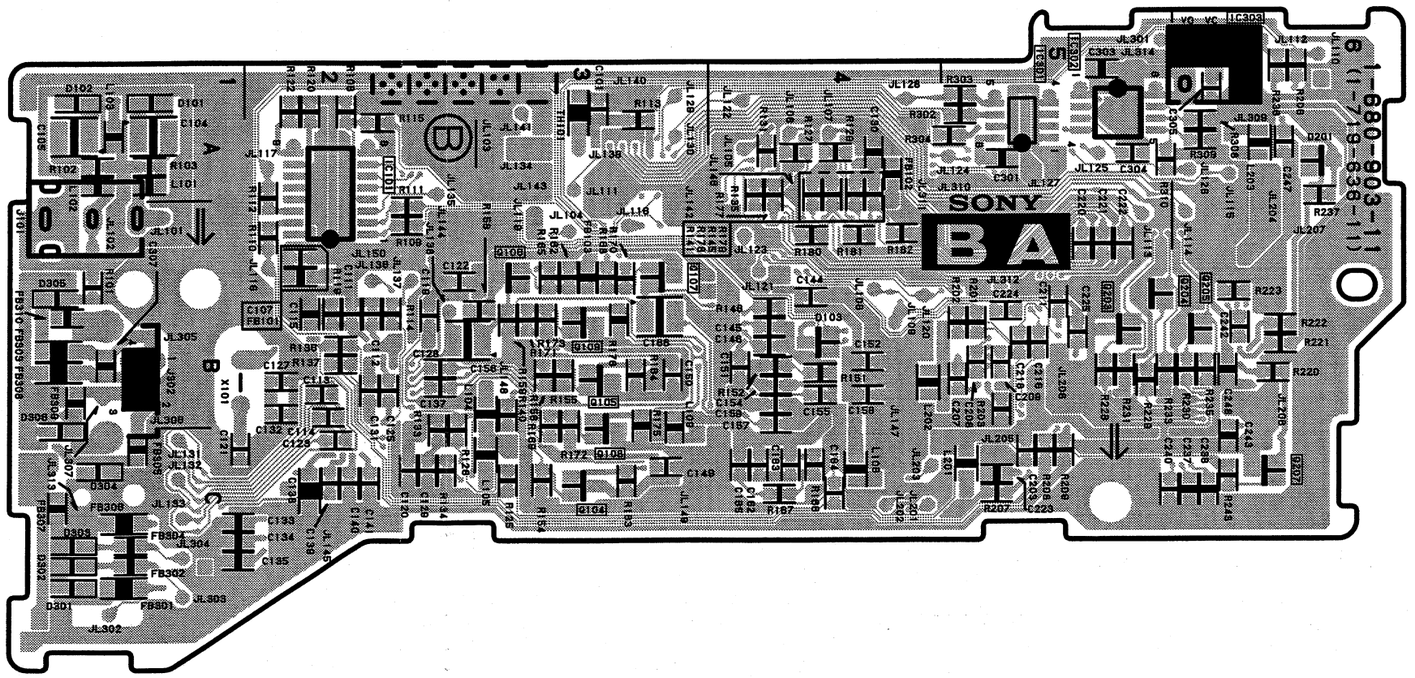

BA -B SIDE-
SUFFIX: -11

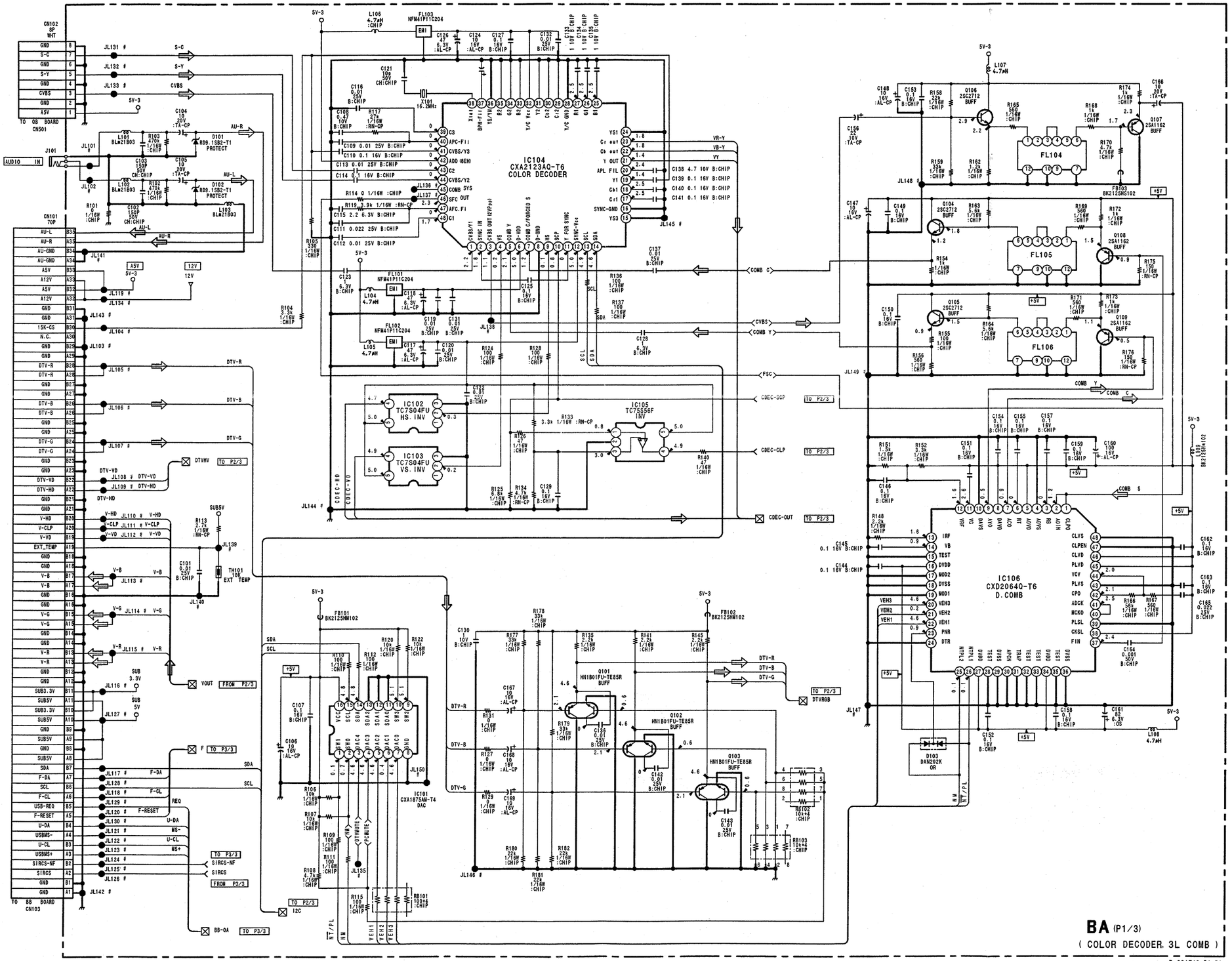
IC104
CXA2123AQ-T6
COLOR DECODER
IC106
CXD2064Q-T6
D.COMB
IC102
TC7S04FU
HS. INV
IC103
TC7S04FU
VS. INV
IC105
TC7SS56F
INV
IC101
CXA1875AM-T4
DAC
BA (P1/3)
(COLOR DECODER, 3L COMB)
B-SS1713-BA-P1

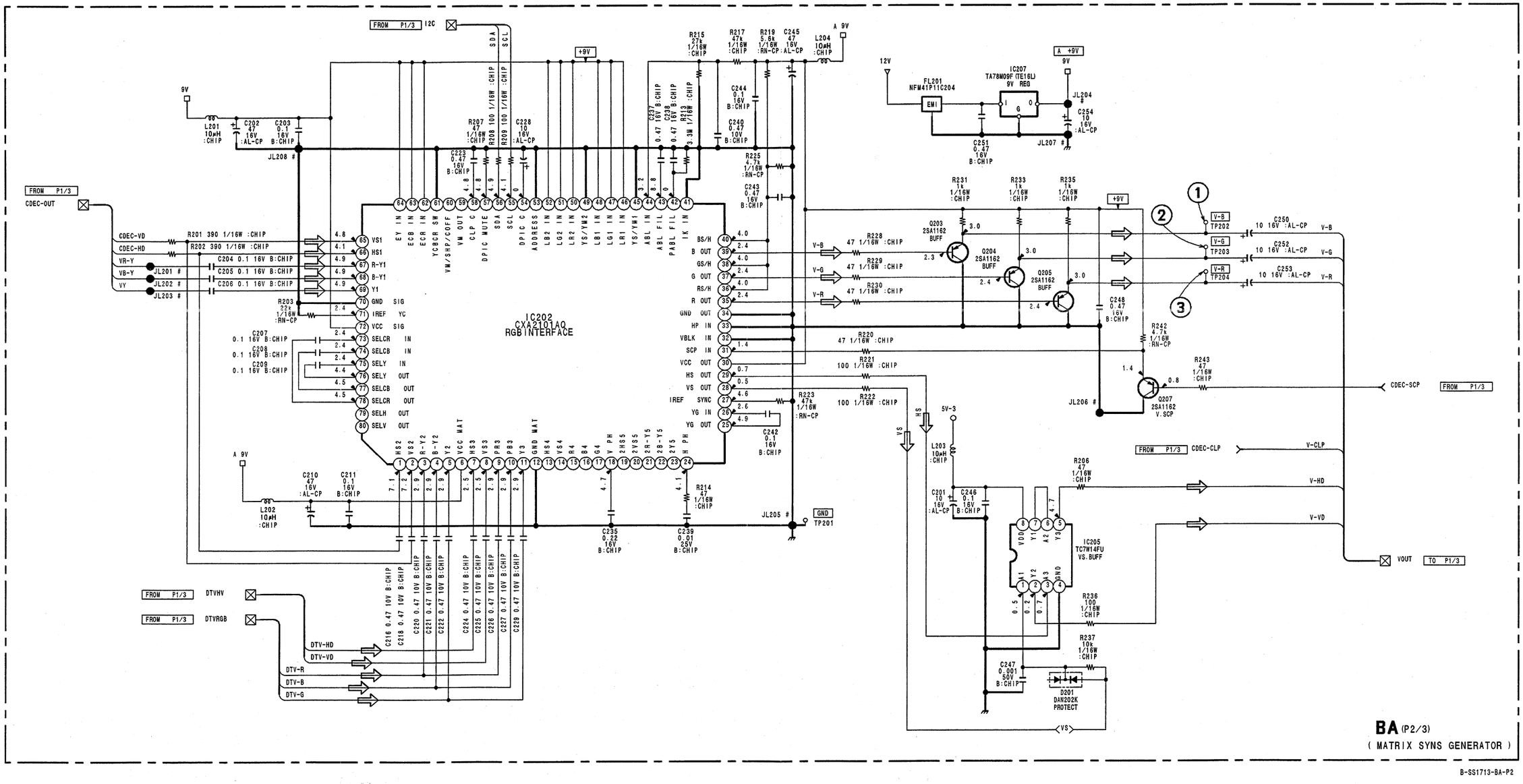
IC202
CXA2101AQ
RGB INTERFACE
IC207
TA78M09F (TE16L)
9V REG
FL201
NFM41P11C204
IC205
TC7W14FU
VS. BUFF
D201
DAN202K
PROTECT
FROM P1/3
CDEC-OUT
CDEC-SCP
CDEC-CLP
VOUT
TO P1/3
DTVHV
DTVRGB
BA (P2/3)
(MATRIX SYNS GENERATOR)
B-SS1713-BA-P2

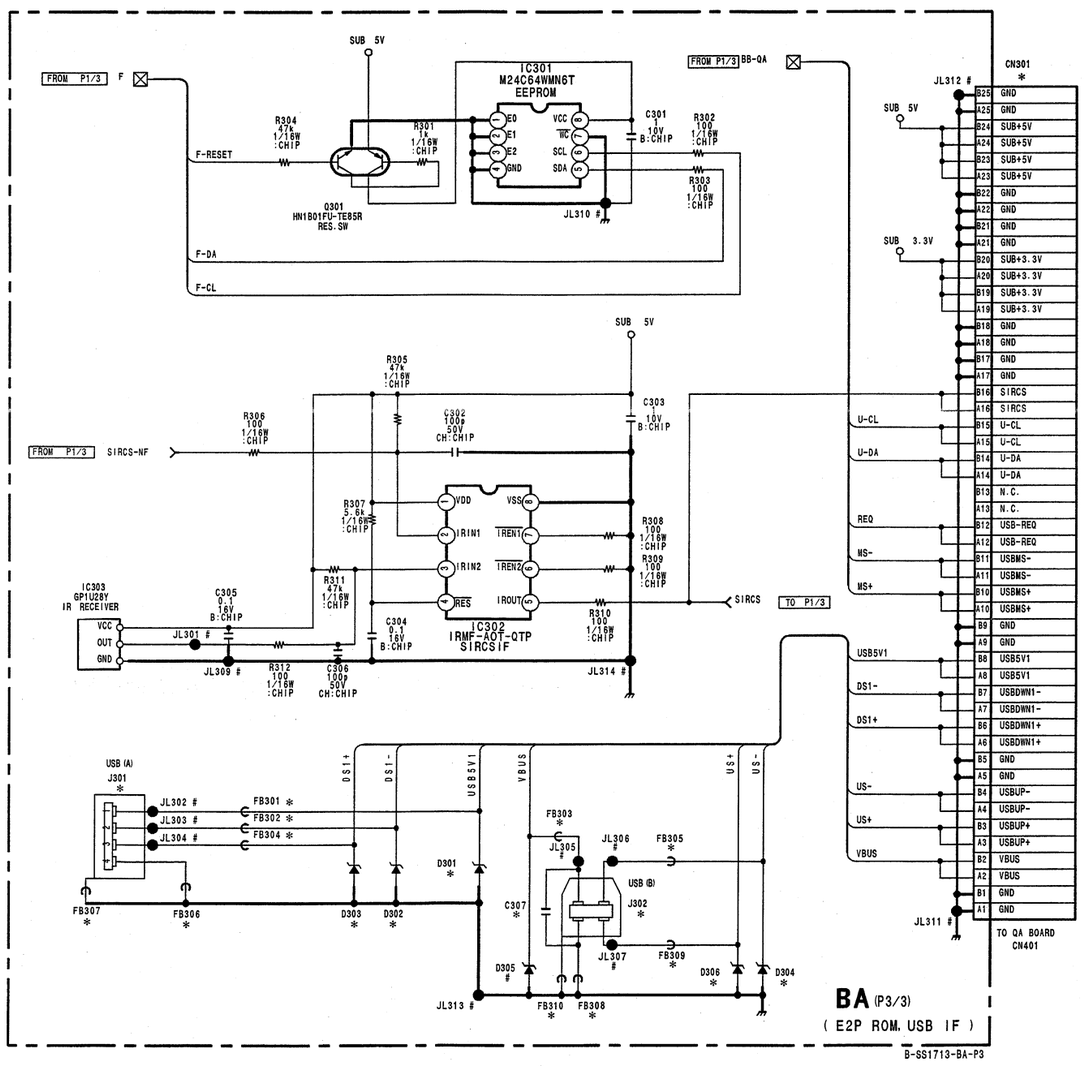

NOTE:*

REF. NO \ MODEL	VPL-CS3/VPL-CX2	VPL-CX3
C307	NO MOUNT	1 10V B:CHIP
CN301	NO MOUNT	50P B TO B:WHT (RECEPTACLE)
D301	NO MOUNT	RD5.6SB-T1 PROTECT
D302	NO MOUNT	UDZ-TE-17-3.9B PROTECT
D303	NO MOUNT	UDZ-TE-17-3.9B PROTECT
D304	NO MOUNT	UDZ-TE-17-3.9B PROTECT
D306	NO MOUNT	UDZ-TE-17-3.9B PROTECT
FB301	NO MOUNT	FBMH3216HM501NT FERRITE 0μH
FB302	NO MOUNT	BK2125HM601 FERRITE 0μH
FB303	NO MOUNT	FBMH3216HM501NT FERRITE 0μH
FB304	NO MOUNT	BK2125HM601 FERRITE 0μH
FB305	NO MOUNT	BK2125HM601 FERRITE 0μH
FB306	NO MOUNT	FBMH3216HM501NT FERRITE 0μH
FB307	NO MOUNT	0 1/16W:CHIP
FB308	NO MOUNT	FBMH3216HM501NT FERRITE 0μH
FB309	NO MOUNT	BK2125HM601 FERRITE 0μH
FB310	NO MOUNT	0 1/16W:CHIP
J301	NO MOUNT	USB CONNECTOR (A)
J302	NO MOUNT	USB CONNECTOR (B)

CXA1875AM (IC101)

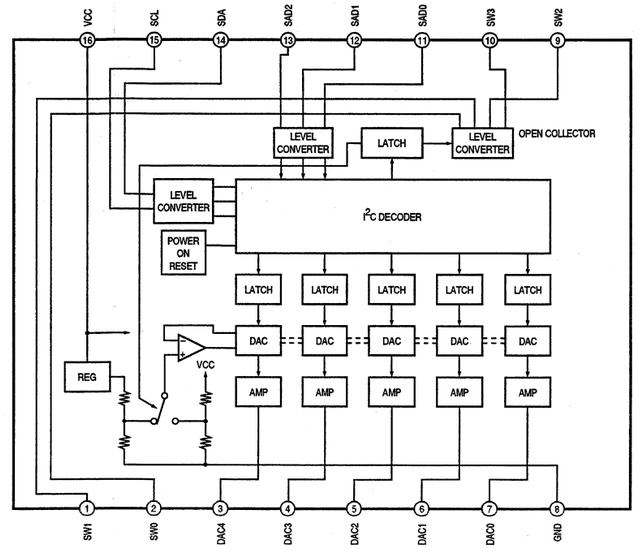

CXD2064Q (IC106)

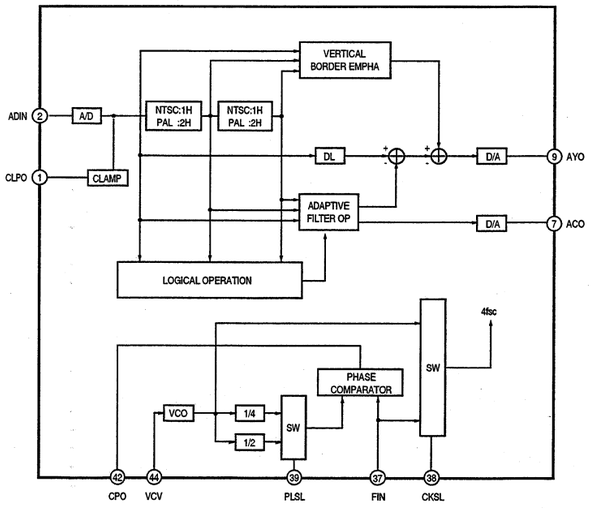

IRMF-AOT-QTP (IC302)

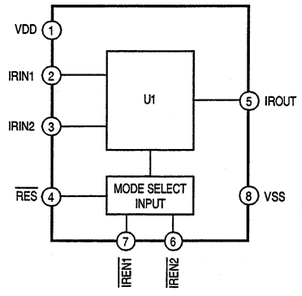

BA Board Waveforms

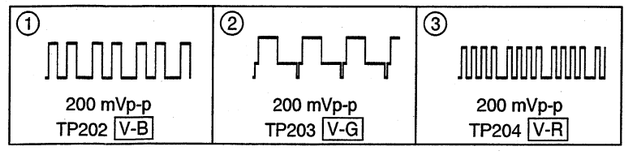

BB Board

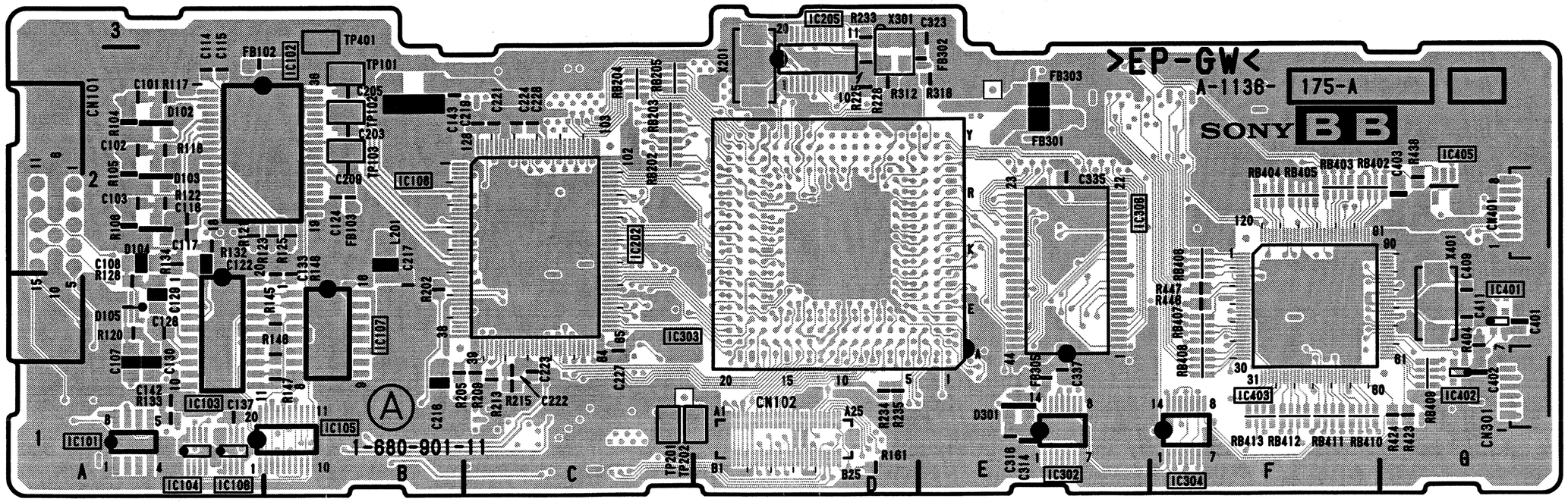

24LC21AT/SN (IC101)
ST24FC21M6TR

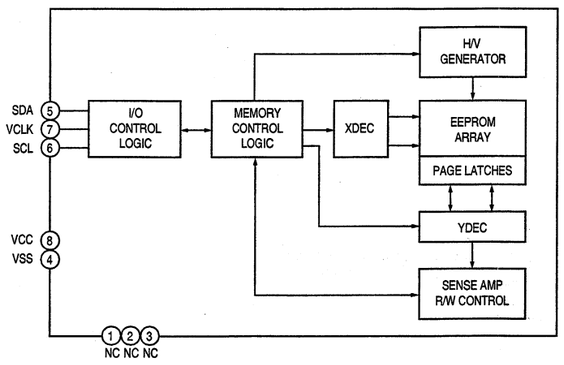

74VHC240MTCX (IC105)

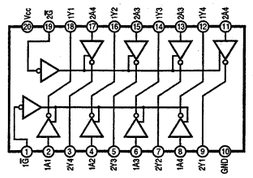

74VHC125MTCX (IC203, 304)

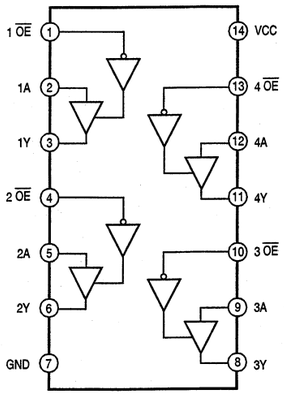

CXA1875AM (IC107)

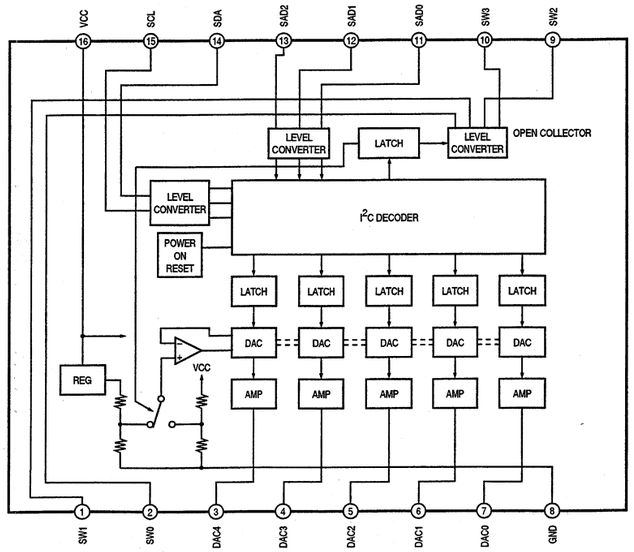

LP29851M5X (IC201, 404)

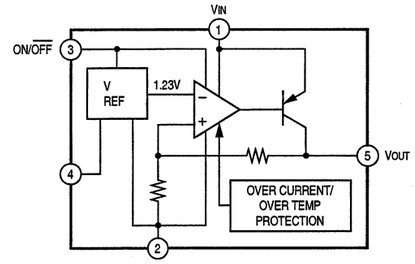

BB Board

IC101 A-1
IC102 B-2
IC103 A-1
IC104 A-1
IC105 B-1
IC106 A-1
IC107 B-1
IC108 B-2
IC109 *B-2
IC201 *B-1
IC202 C-2
IC203 *C-1
IC205 D-3
IC301 *E-1
IC302 E-1
IC303 C-1
IC304 F-1
IC305 *E-2
IC306 E-2
IC401 G-1
IC402 G-1
IC403 F-1
IC404 *F-1
IC405 G-2

Q101 *A-1
Q102 *A-1
Q103 *A-1
Q201 *B-2
Q202 *C-1
Q203 *D-1

D101 *A-1
D102 A-2
D103 A-2
D104 A-2
D105 A-1
D106 *A-1
D107 *A-2
D301 E-1
D401 *G-1
D402 *G-1

TP101 B-2
TP102 B-2
TP103 B-2
TP201 C-1
TP202 C-1
TP401 B-3

*:B Side mount

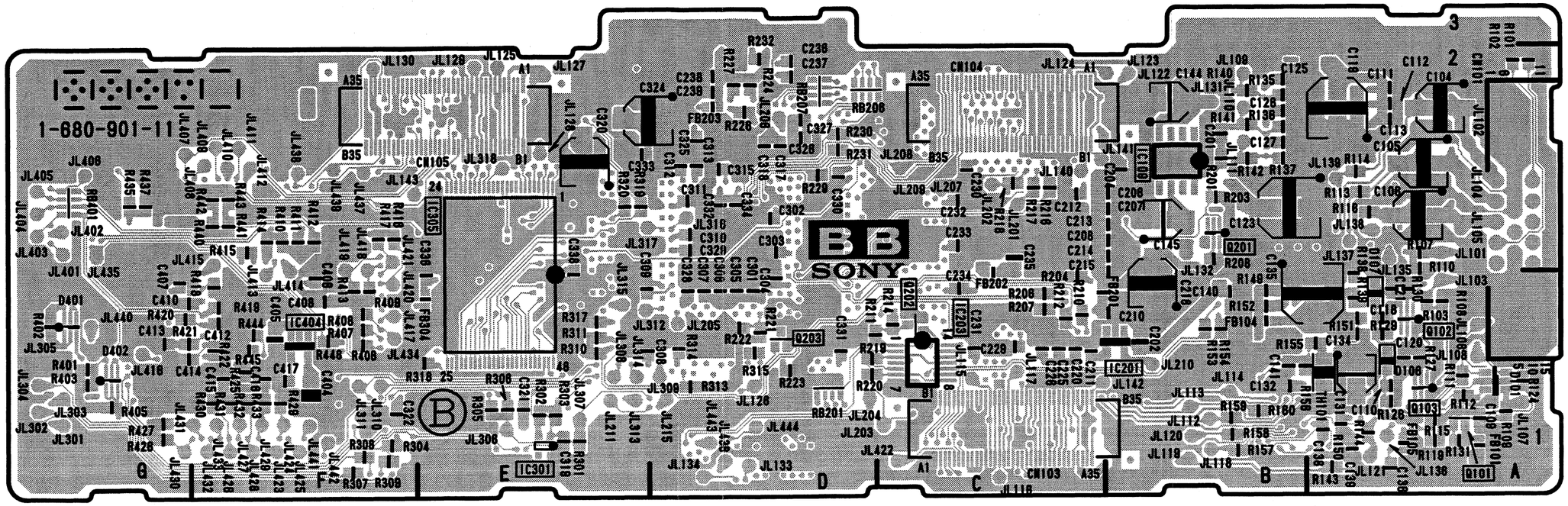

BB -B SIDE-
SUFFIX: -11

M52758FP (IC102)

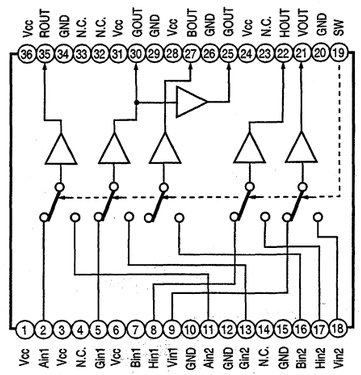

M52347FP (IC103)

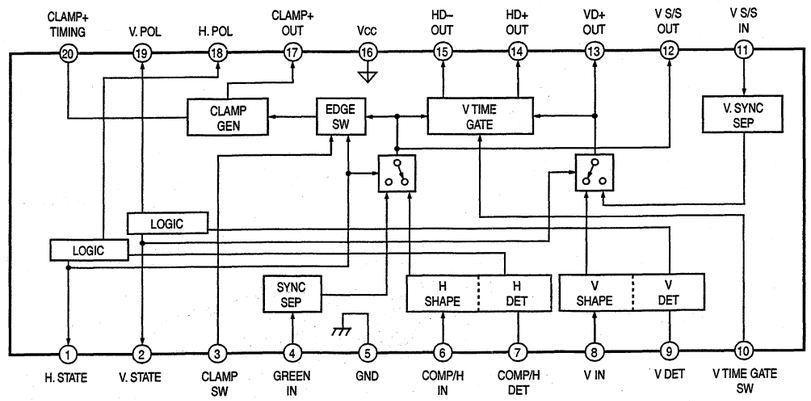

BB Board Waveforms

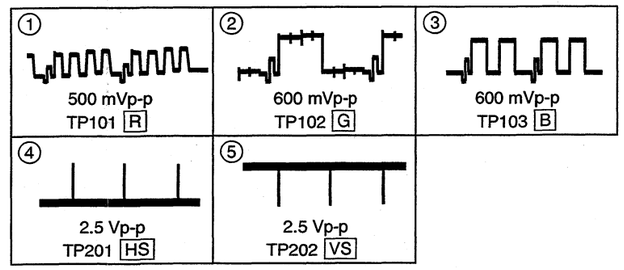

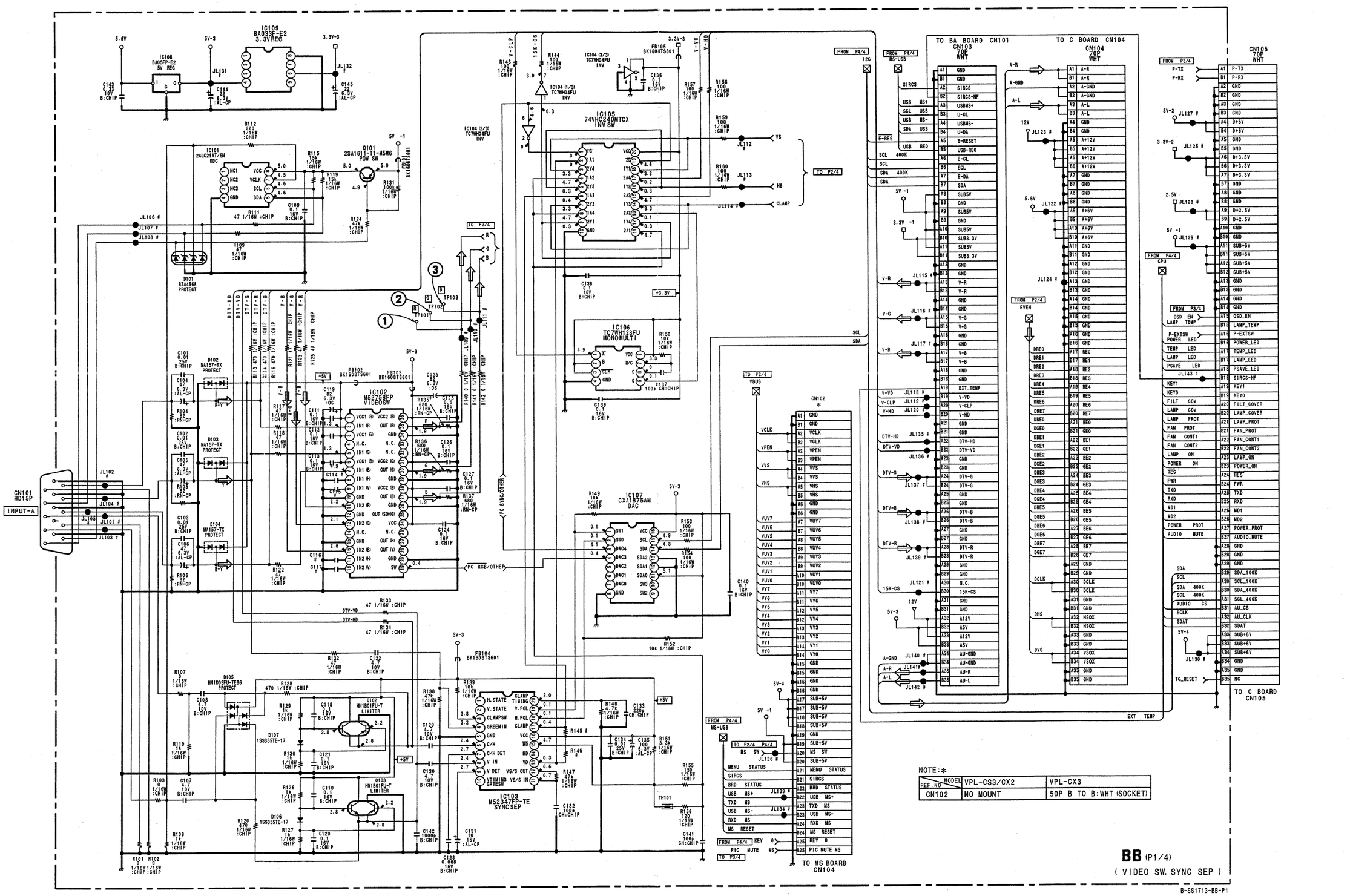

NOTE:*

REF_NO \ MODEL	VPL-CS3/CX2	VPL-CX3
CN102	NO MOUNT	50P B TO B:WHT (SOCKET)

NOTE:*

REF.NO \ MODEL	VPL-CS3	VPL-CX2	VPL-CX3
IC202	AD9884AKS-100	AD9884AKS-140	AD9884AKS-140
X201	13.08384 MHz	16.9344 MHz	16.9344 MHz
R221	NO MOUNT	NO MOUNT	10K 1/16W:CHIP
R222	10K 1/16W:CHIP	10K 1/16W:CHIP	NO MOUNT
RB201	10k*4:CHIP	10k*4:CHIP	NO MOUNT

IC202 * AD CONVERTER

IC205 HW1714-01 SPECTRUM SPREAD

IC303 (1/5) PW164-10RS SCAN CONV

IC303 (2/5) PW164-10RS SCAN CONV

IC303 (4/5) PW164-10RS SCAN CONV

IC201 LP2985IM5X-3.3 3.3V REG

IC203 74VHC125MTCX BUF

Q201 HN1C01FU-TE85R CLAMP

Q202 DTC114EUA-T106 SYNC SW

Q203

FB202 BK160BTS601

L201 6.8uH

L202 100uH

X201 *

RB201 *

RB202 10x4 :CHIP

RB203 10x4 :CHIP

RB204 10x4 :CHIP

RB205 10x4 :CHIP

RB206 10x4 :CHIP

RB207 10x4 :CHIP

JL201 # JL202 # JL203 # JL204 # JL205 # JL206 # JL207 # JL208 # JL209 # JL210 # JL211 # JL215 #

TP201 TP202

FB201 #

3.3V-3 3.3V-2 +3.3V +5V-3

R R G G B B CLAMP

FROM P1/4 FROM P3/4 FROM P1/4 FROM P1/4

SDA SCL HS VS GVS GHS

TO P4/4 TO P1/4

DVS EVEN

TMDS/ADC

MS/CE

VHS VVS

GBLKSPL GREF GCOAST

GRAPHIC PORT

GENERAL I/O PORT B

B (P2/4)

(AD CONVERTER, SCAN CONVERTER)

B-SS1713-BB-P2

BB (3/4)

NOTE:*

REF.NO \ MODEL	VPL-CS3/CX2	VPL-CX3
IC119	NO MOUNT	TC7S00FU (TE85R)
R247	NO MOUNT	0 1/16W:CHIP
R248	NO MOUNT	10k 1/16W:CHIP

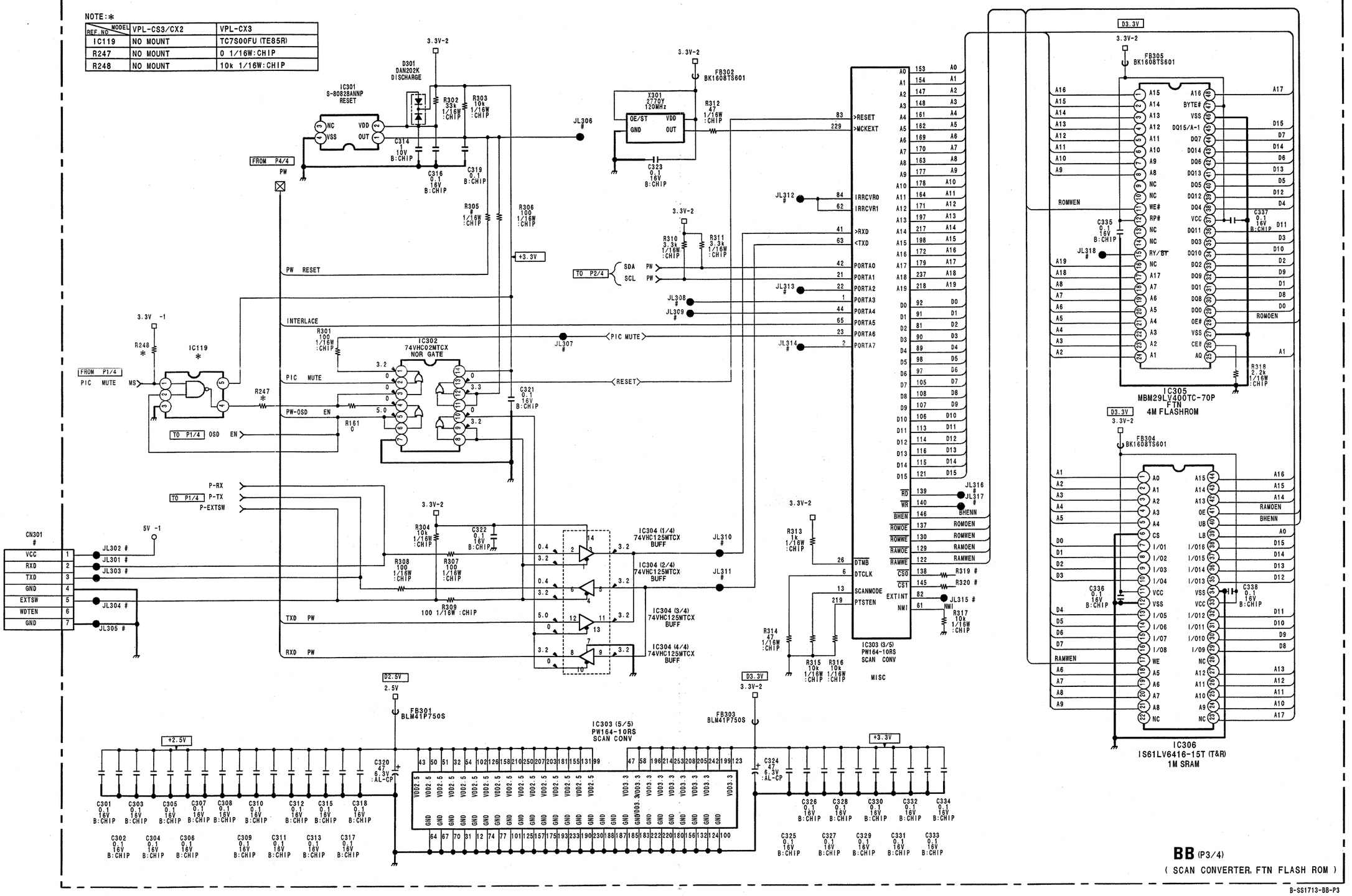

B-SS1713-BB-P3

BB (P3/4)

(SCAN CONVERTER, FTN FLASH ROM)

7-12

NOTE:*

REF.NO \ MODEL	VPL-CS3	VPL-CX2	VPL-CX3
IC405	NO MOUNT	NO MOUNT	LMC7101BI
R435	NO MOUNT	NO MOUNT	27k:RN-CP
R437	NO MOUNT	NO MOUNT	56k:RN-CP
R438	NO MOUNT	NO MOUNT	100 1/16W:CHIP
R440	10k 1/16W:CHIP	10k 1/16W:CHIP	NO MOUNT
R441	NO MOUNT	10k 1/16W:CHIP	10k 1/16W:CHIP
R442	NO MOUNT	NO MOUNT	10k 1/16W:CHIP
R443	10k 1/16W:CHIP	NO MOUNT	NO MOUNT

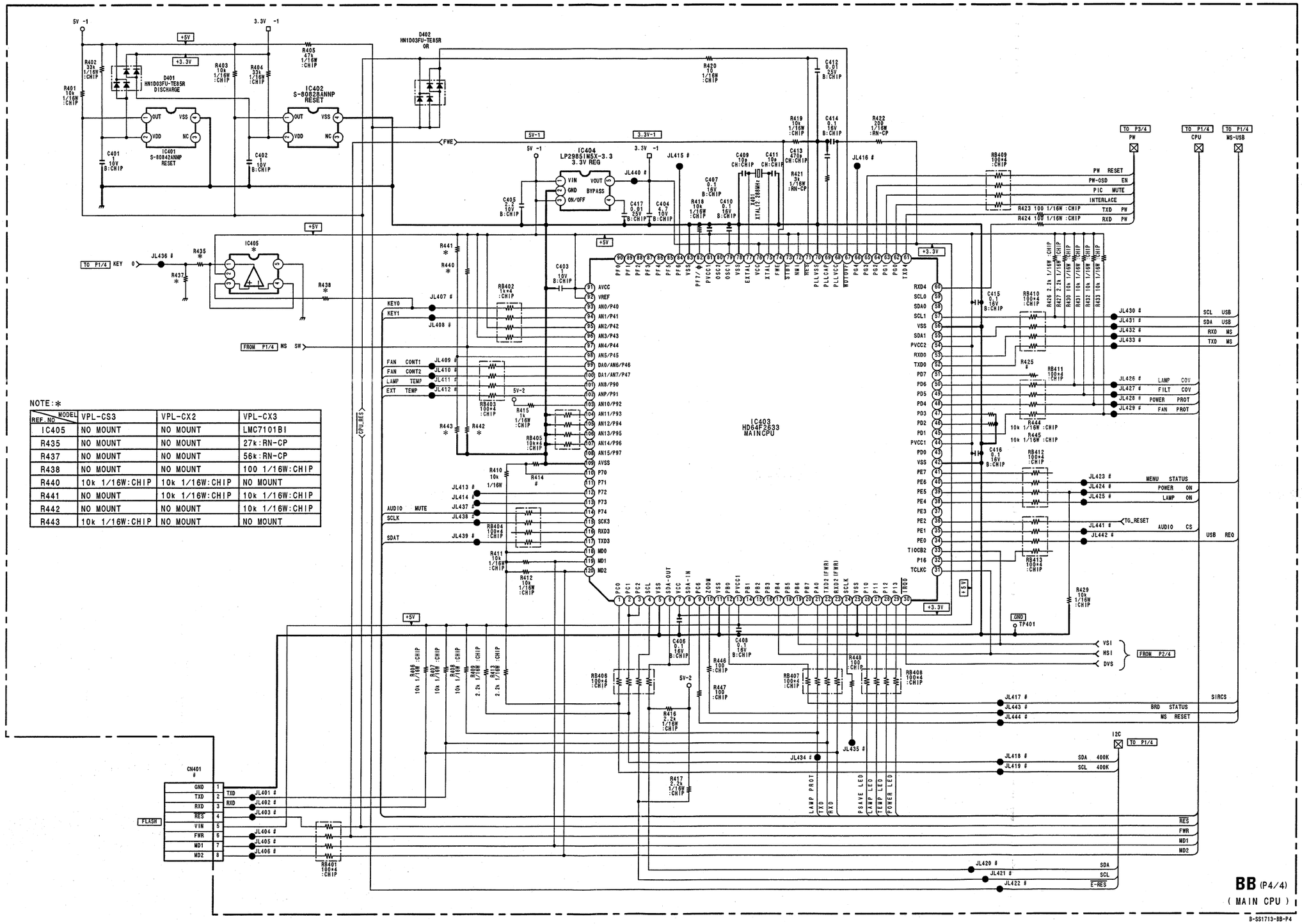

BB (P4/4)
(MAIN CPU)

B-SS1713-BB-P4

C Board

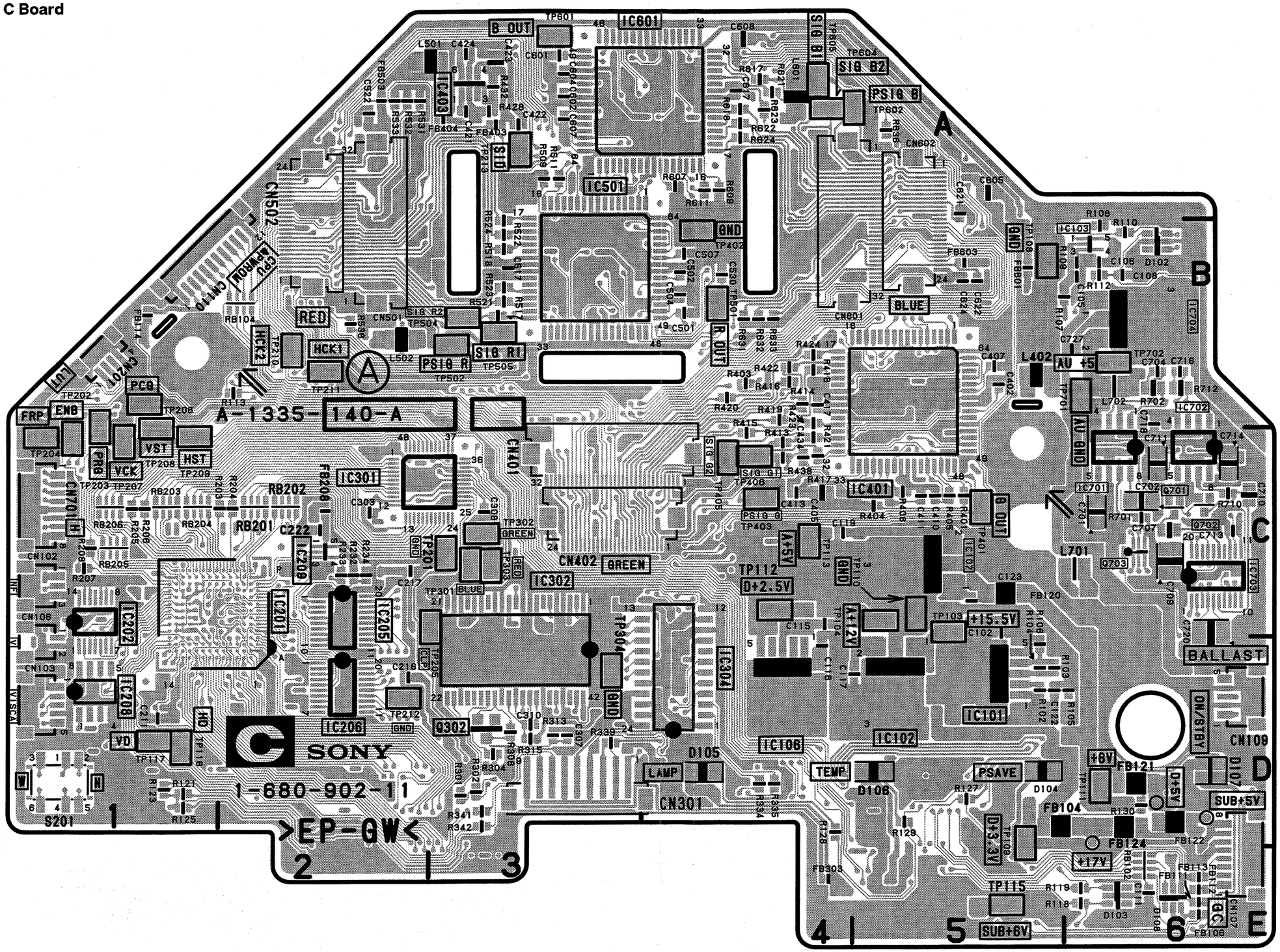

C -A SIDE-
SUFFIX: -11

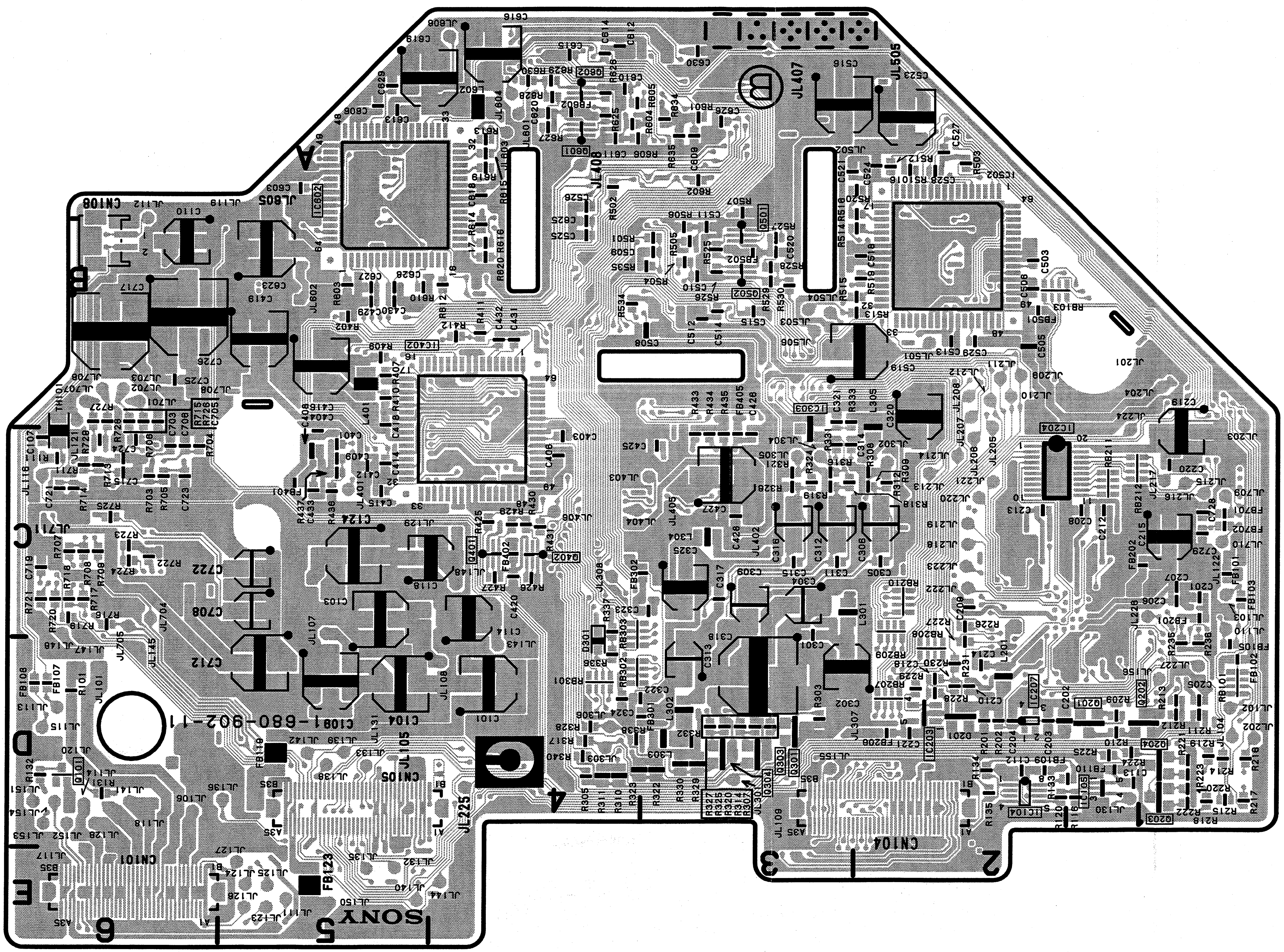

C Board

IC101	D-5	D102	B-6
IC102	D-5	D103	E-6
IC103	B-6	D104	D-5
IC104	*A-2	D105	D-4
IC105	*A-1	D106	D-5
IC106	D-4	D107	D-6
IC107	C-5	D108	E-6
IC201	C-2	D201	*A-2
IC202	C-1	D301	*A-4
IC203	*A-2		
IC204	*B-2	TP103	C-5
IC205	C-2	TP104	C-4
IC206	D-2	TP108	B-5
IC207	*D-2	TP109	D-5
IC208	D-1	TP110	C-5
IC209	C-2	TP111	D-6
IC301	C-2	TP112	C-4
IC302	C-3	TP113	C-4
IC303	*B-3	TP115	E-5
IC304	D-4	TP116	D-1
IC401	C-5	TP117	D-1
IC402	*B-5	TP201	C-3
IC403	A-3	TP202	B-1
IC501	A-3	TP203	C-1
IC502	*A-2	TP204	C-1
IC601	A-4	TP205	D-3
IC602	*A-5	TP206	B-1
IC701	C-6	TP207	C-1
IC702	B-6	TP208	C-1
IC703	C-6	TP209	C-1
IC704	B-6	TP210	B-2
		TP211	B-2
Q101	*D-6	TP212	D-2
Q201	*A-1	TP213	A-3
Q202	*A-1	TP301	C-3
Q203	*A-1	TP302	C-3
Q204	*A-1	TP303	C-3
Q301	*A-3	TP304	D-3
Q302	D-3	TP401	C-5
Q303	*A-3	TP402	B-4
Q304	*A-3	TP403	C-4
Q401	*C-4	TP405	C-4
Q402	*C-4	TP406	C-4
Q501	*B-3	TP501	B-4
Q502	*B-3	TP502	B-3
Q601	*A-4	TP504	B-3
Q602	*A-4	TP505	B-3
Q701	C-6	TP601	A-3
Q702	C-6	TP602	A-5
Q703	C-6	TP604	A-5
		TP605	A-4
		TP701	B-6
		TP702	B-6

*:B Side mount

C -B SIDE-
SUFFIX: -11

CXA3512R (IC401, 501, 601 : VPL-CS3)
(IC401, 402, 501, 502, 601, 602 : VPL-CX2, VPL-CX3)

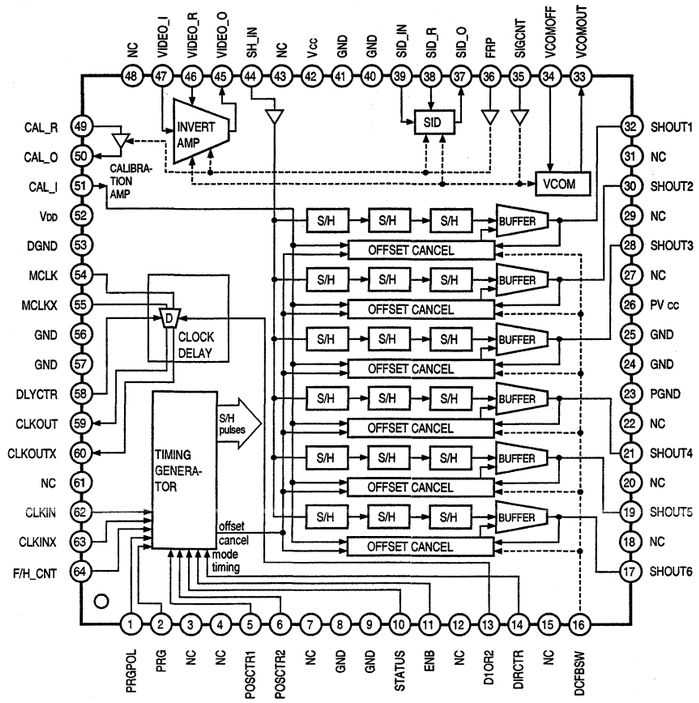

M52749FP (IC302)

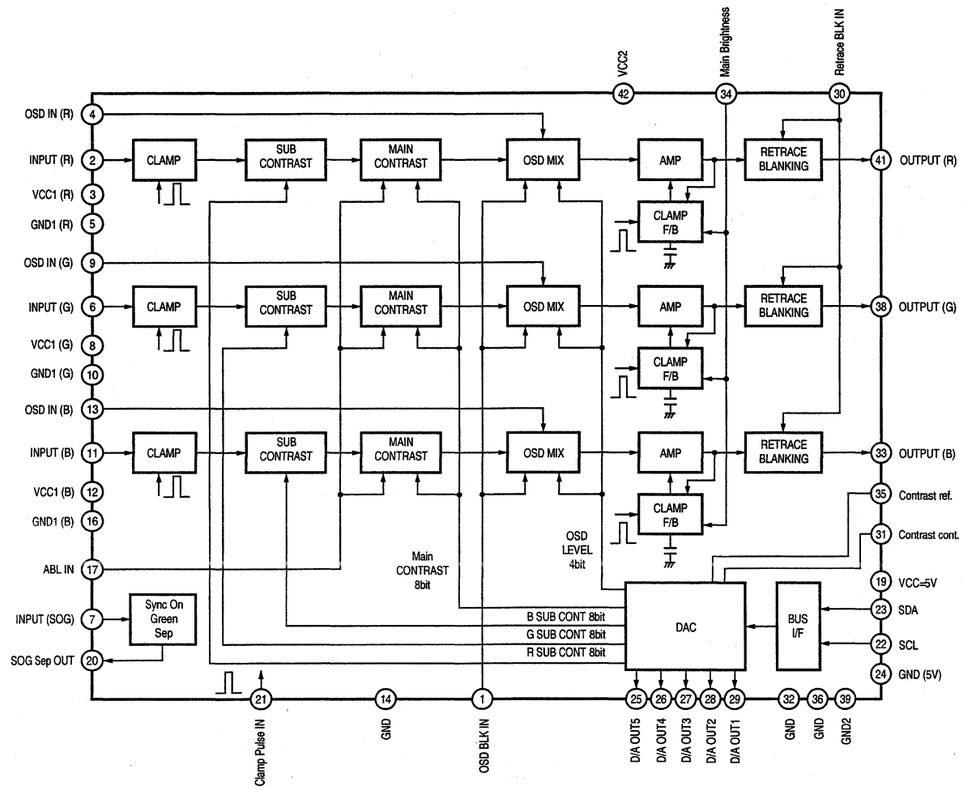

CXA1846BN (IC703)

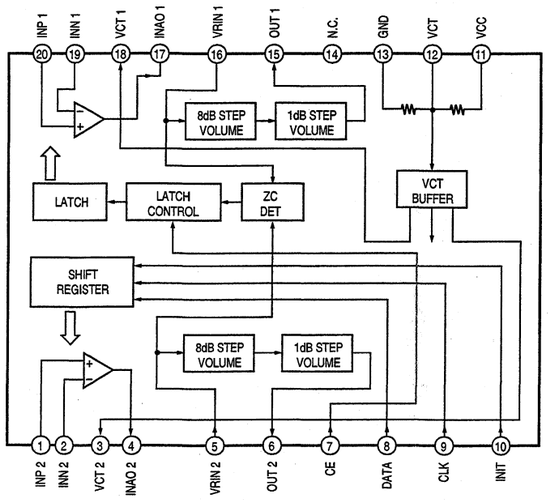

NJM062M (IC701, 702)
NJM2073M

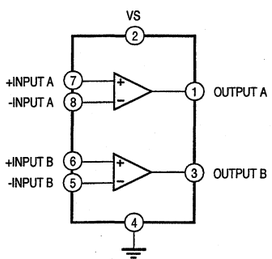

C Board Waveforms

① 3.0 Vp-p TP116 HD	② 3.0 Vp-p TP117 VD	③ 400 mVp-p TP301 BLUE	④ 400 mVp-p TP303 RED
⑤ 400 mVp-p TP302 GREEN	⑥ 1 Vp-p TP401 G OUT	⑦ 7.5 Vp-p TP405 SIG G2	⑧ 7.5 Vp-p TP406 SIG G1
⑨ 7.5 Vp-p TP403 PSIG G	⑩ 1 Vp-p TP501 R OUT	⑪ 7.5 Vp-p TP505 SIG R1	⑫ 7.5 Vp-p TP504 SIG R2
⑬ 7.5 Vp-p TP502 PSIG R	⑭ 1 Vp-p TP601 B OUT	⑮ 7.5 Vp-p TP605 SIG B1	⑯ 7.5 Vp-p TP604 SIG B2
			⑰ 7.5 Vp-p TP602 PSIG B

7-16

 C (1/7)

1

2

3

4

5

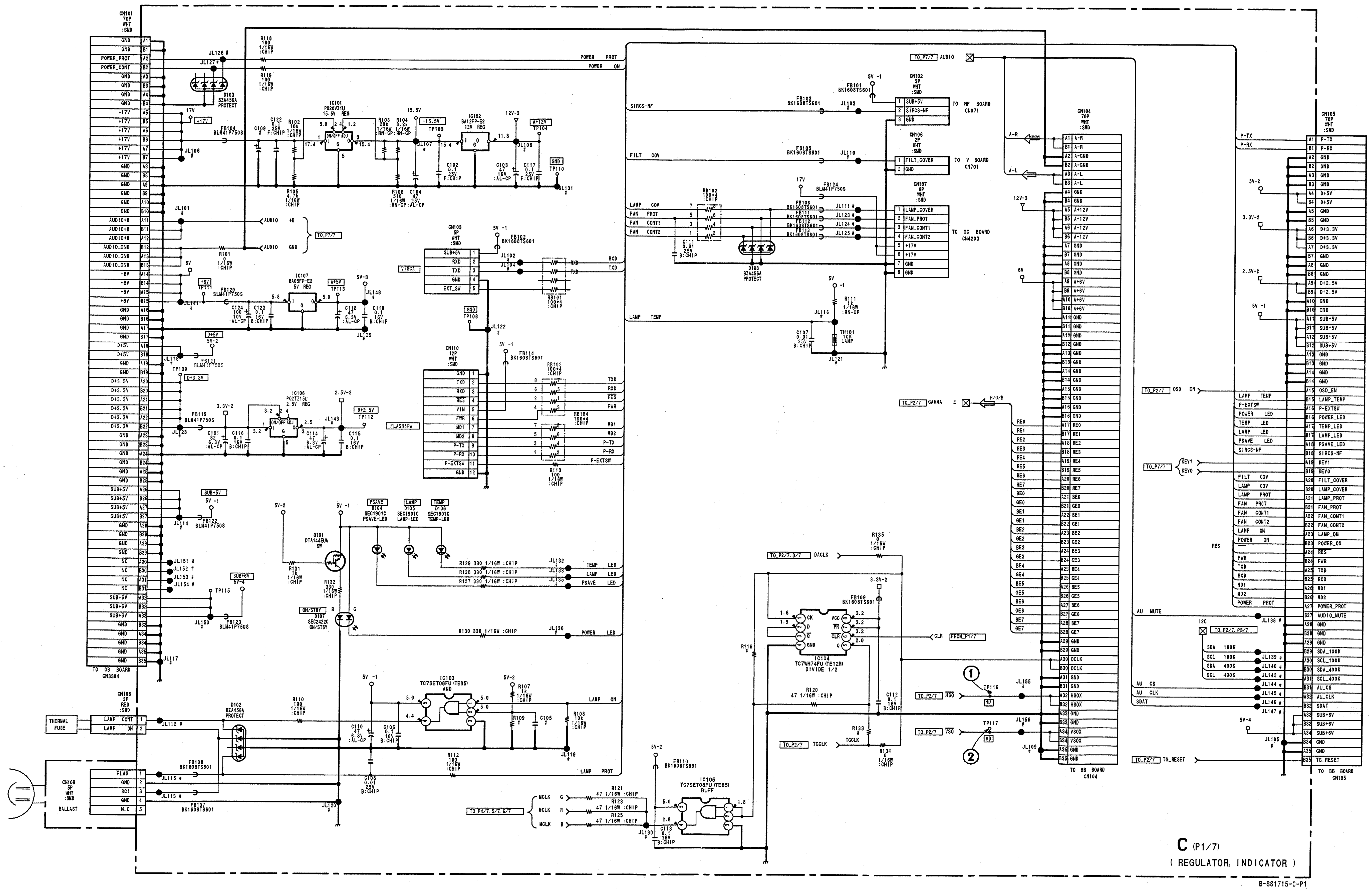
CN101 70P WHT :SMD
GND A1
GND B1
POWER_PROT A2
POWER_CONT B2
GND A3
GND B3
GND A4
GND B4
+17V A5
+17V B5
+17V A6
+17V B6
+17V A7
+17V B7
GND A8
GND B8
GND A9
GND B9
GND A10
GND B10
AUDIO+B A11
AUDIO+B B11
AUDIO+B A12
AUDIO_GND B12
AUDIO_GND A13
AUDIO_GND B13
+6V A14
+6V B14
+6V A15
+6V B15
GND A16
GND B16
GND A17
GND B17
D+5V A18
D+5V B18
GND A19
GND B19
D+3.3V A20
D+3.3V B20
D+3.3V A21
D+3.3V B21
D+3.3V A22
D+3.3V B22
GND A23
GND B23
GND A24
GND B24
GND A25
GND B25
SUB+5V A26
SUB+5V B26
SUB+5V A27
SUB+5V B27
GND A28
GND B28
GND A29
GND B29
NC A30
NC B30
NC A31
NC B31
SUB+6V A32
SUB+6V B32
SUB+6V A33
GND B33
GND A34
GND B34
GND A35
GND B35
TO GB BOARD CN3304
JL126 # JL127 # D103 BZA456A PROTECT
R118 100 1/16W :CHIP
R119 100 1/16W :CHIP
POWER PROT
POWER ON
17V +17V
FB104 BLM41P750S
JL106 #
C109 # C122 0.1 25V F:CHIP
R102 10k 1/16W :CHIP
R105 4.7k 1/16W :CHIP
IC101 PQ20VZ1U 15.5V REG
R103 20k 1/16W :RN-CP R104 8.2k 1/16W :RN-CP
R106 510 1/16W :RN-CP C104 47 25V :AL-CP
15.5V +15.5V TP103 JL107 #
IC102 BA12FP-E2 12V REG
12V-3 A+12V TP104 JL108 #
C102 0.1 25V F:CHIP C103 47 16V :AL-CP C117 0.1 25V F:CHIP
GND TP110 JL131 #
JL101 # AUDIO +B AUDIO GND TO_P7/7
R101 0 1/16W :CHIP
6V +6V TP111 JL141 # FB120 BLM41P750S
C124 100 10V :AL-CP C123 0.1 16V B:CHIP
IC107 BA05FP-E2 5V REG
A+5V TP113 5V-3 JL148 #
C118 47 6.3V :AL-CP C119 0.1 16V B:CHIP JL129 #
D+5V 5V-2 JL118 # FB121 BLM41P750S
TP109 D+3.3V
3.3V-2 FB119 BLM41P750S JL128 #
C101 82 6.3V :AL-CP C116 0.1 16V B:CHIP
IC106 PQ2TZ15U 2.5V REG
2.5V-2 D+2.5V TP112 JL143 #
C114 47 6.3V :AL-CP C115 0.1 16V B:CHIP
SUB+5V 5V -1 JL114 # FB122 BLM41P750S
JL151 # JL152 # JL153 # JL154 #
SUB+6V 5V-4 TP115 JL150 # FB123 BLM41P750S
JL117 #
VISCA
CN103 5P WHT :SMD
SUB+5V 1
RXD 2
TXD 3
GND 4
EXT_SW 5
5V -1 FB102 BK1608TS601
JL102 # JL104 #
RB101 100*4 :CHIP
RXD TXD
GND TP108 JL122 #
FLASH&PW
CN110 12P WHT :SMD
GND 1
TXD 2
RXD 3
RES 4
VIN 5
FWR 6
MD1 7
MD2 8
P-TX 9
P-RX 10
P-EXTSW 11
GND 12
5V -1 FB114 BK1608TS601
RB103 100*4 :CHIP
RB104 100*4 :CHIP
R113 100 1/16W :CHIP
TXD RXD RES FWR MD1 MD2 P-TX P-RX P-EXTSW
5V-2 5V -1
Q101 DTA144EUA SW
R131 1k 1/16W :CHIP
R132 330 1/16W :CHIP
PSAVE D104 SEC1901C PSAVE-LED
LAMP D105 SEC1901C LAMP-LED
TEMP D106 SEC1901C TEMP-LED
R129 330 1/16W :CHIP JL132 TEMP LED
R128 330 1/16W :CHIP JL133 LAMP LED
R127 330 1/16W :CHIP JL135 PSAVE LED
ON/STBY D107 SEC2422C ON/STBY
R130 330 1/16W :CHIP JL136 POWER LED
CN108 2P RED :SMD
THERMAL FUSE
LAMP CONT 1
LAMP ON 2
JL112 #
D102 BZA456A PROTECT
R110 100 1/16W :CHIP
5V -1 C110 47 6.3V :AL-CP C106 0.1 16V B:CHIP
IC103 TC7SET08FU (TE85) AND
5V-2 R107 1k 1/16W :CHIP R109 # C105 # R108 10k 1/16W :CHIP
LAMP ON
JL119 #
R112 100 1/16W :CHIP
LAMP PROT
CN109 5P WHT :SMD BALLAST
FLAG 1
GND 2
SCI 3
GND 4
N.C 5
JL115 # FB108 BK1608TS601
JL113 # FB107 BK1608TS601
C108 0.01 25V B:CHIP JL120 #
TO_P4/7, 5/7, 6/7
MCLK G R121 47 1/16W :CHIP
MCLK R R123 47 1/16W :CHIP
MCLK B R125 47 1/16W :CHIP
JL130 # C113 0.1 16V B:CHIP
5V-2 FB110 BK1608TS601
IC105 TC7SET08FU (TE85) BUFF
SIRCS-NF FB103 BK1608TS601 JL103 #
5V -1 FB101 BK1608TS601
CN102 3P WHT :SMD
SUB+5V 1
SIRCS-NF 2
GND 3
TO NF BOARD CN071
FILT COV FB105 BK1608TS601 JL110 #
CN106 2P WHT :SMD
FILT_COVER 1
GND 2
TO V BOARD CN701
LAMP COV FAN PROT FAN CONT1 FAN CONT2
RB102 100*4 :CHIP
C111 0.01 25V B:CHIP
D108 BZA456A PROTECT
17V FB124 BLM41P750S
FB106 FB111 FB112 FB113 BK1608TS601
JL111 # JL123 # JL124 # JL125 #
CN107 8P WHT :SMD
LAMP_COVER 1
FAN_PROT 2
FAN_CONT1 3
FAN_CONT2 4
+17V 5
+17V 6
GND 7
GND 8
TO GC BOARD CN4203
LAMP TEMP
5V -1 R111 1k 1/16W :RN-CP JL116 #
C107 0.01 25V B:CHIP TH101 10K LAMP JL121 #
TO_P2/7.3/7 DACLK
R135 0 1/16W :CHIP
3.3V-2 FB109 BK1608TS601
IC104 TC7WH74FU (TE12R) DIVIDE 1/2
CK D Q GND VCC PR CLR Q
CLR FROM_P1/7
R116 # R120 47 1/16W :CHIP
C112 0.1 16V B:CHIP
R133 # TO_P2/7 TGCLK R134 0 1/16W :CHIP
TO_P7/7 AUDIO
A-R A-L
12V-3 6V
TO_P2/7 GAMMA E R/G/B
CN104 70P WHT :SMD
A1 A-R
B1 A-R
A2 A-GND
B2 A-GND
A3 A-L
B3 A-L
A4 GND
B4 GND
A5 A+12V
B5 A+12V
A6 A+12V
B6 A+12V
A7 GND
B7 GND
A8 GND
B8 GND
A9 A+6V
B9 A+6V
A10 A+6V
B10 A+6V
A11 GND
B11 GND
A12 GND
B12 GND
A13 GND
B13 GND
A14 GND
B14 GND
A15 GND
B15 GND
A16 GND
B16 GND
A17 RE0
B17 RE1
A18 RE2
B18 RE3
A19 RE4
B19 RE5
A20 RE6
B20 RE7
A21 BE0
B21 GE0
A22 BE1
B22 GE1
A23 BE2
B23 GE2
A24 BE3
B24 GE3
A25 BE4
B25 GE4
A26 BE5
B26 GE5
A27 BE6
B27 GE6
A28 BE7
B28 GE7
A29 GND
B29 GND
A30 DCLK
B30 DCLK
A31 GND
B31 GND
A32 HSOX
B32 HSOX
A33 GND
B33 GND
A34 VSOX
B34 VSOX
A35 GND
B35 GND
TO BB BOARD CN104
TO_P2/7 HSO TP116 HD JL155 #
TO_P2/7 VSO TP117 VD JL156 # JL109 #
1
2
TO_P2/7 OSD EN
TO_P7/7 KEY1 KEY0
AU MUTE JL138 #
I2C TO_P2/7, P3/7
SDA 100K JL139 #
SCL 100K JL140 #
SDA 400K JL142 #
SCL 400K JL144 #
AU CS JL145 #
AU CLK JL146 #
SDAT JL147 #
5V-4 JL105 #
TO_P2/7 TG_RESET
P-TX P-RX
5V-2 3.3V-2 2.5V-2 5V -1
LAMP TEMP P-EXTSW POWER LED TEMP LED LAMP LED PSAVE LED SIRCS-NF FILT COV LAMP COV LAMP PROT FAN PROT FAN CONT1 FAN CONT2 LAMP ON POWER ON RES FWR TXD RXD MD1 MD2 POWER PROT
CN105 70P WHT :SMD
A1 P-TX
B1 P-RX
A2 GND
B2 GND
A3 GND
B3 GND
A4 D+5V
B4 D+5V
A5 GND
B5 GND
A6 D+3.3V
B6 D+3.3V
A7 D+3.3V
B7 GND
A8 GND
B8 GND
A9 D+2.5V
B9 D+2.5V
A10 GND
B10 GND
A11 SUB+5V
B11 SUB+5V
A12 SUB+5V
B12 SUB+5V
A13 GND
B13 GND
A14 GND
B14 GND
A15 OSD_EN
B15 LAMP_TEMP
A16 P-EXTSW
B16 POWER_LED
A17 TEMP_LED
B17 LAMP_LED
A18 PSAVE_LED
B18 SIRCS-NF
A19 KEY1
B19 KEY0
A20 FILT_COVER
B20 LAMP_COVER
A21 LAMP_PROT
B21 FAN_PROT
A22 FAN_CONT1
B22 FAN_CONT2
A23 LAMP_ON
B23 POWER_ON
A24 RES
B24 FWR
A25 TXD
B25 RXD
A26 MD1
B26 MD2
A27 POWER_PROT
B27 AUDIO_MUTE
A28 GND
B28 GND
A29 GND
B29 SDA_100K
A30 SCL_100K
B30 SDA_400K
A31 SCL_400K
B31 AU_CS
A32 AU_CLK
B32 SDAT
A33 SUB+6V
B33 SUB+6V
A34 SUB+6V
B34 GND
A35 GND
B35 TG_RESET
TO BB BOARD CN105
C (P1/7)
(REGULATOR, INDICATOR)
B-SS1715-C-P1

NOTE:*

REF. NO \ MODEL	VPL-CS3	VPL-CX2/CX3
R226	100k 1/16W:CHIP	47k 1/16W:CHIP
R227	100k 1/16W:CHIP	47k 1/16W:CHIP

C (P2/7)
(3D GAMMA&TG, 3D GAMMA EEPROM)

B-SS1715-C-P2

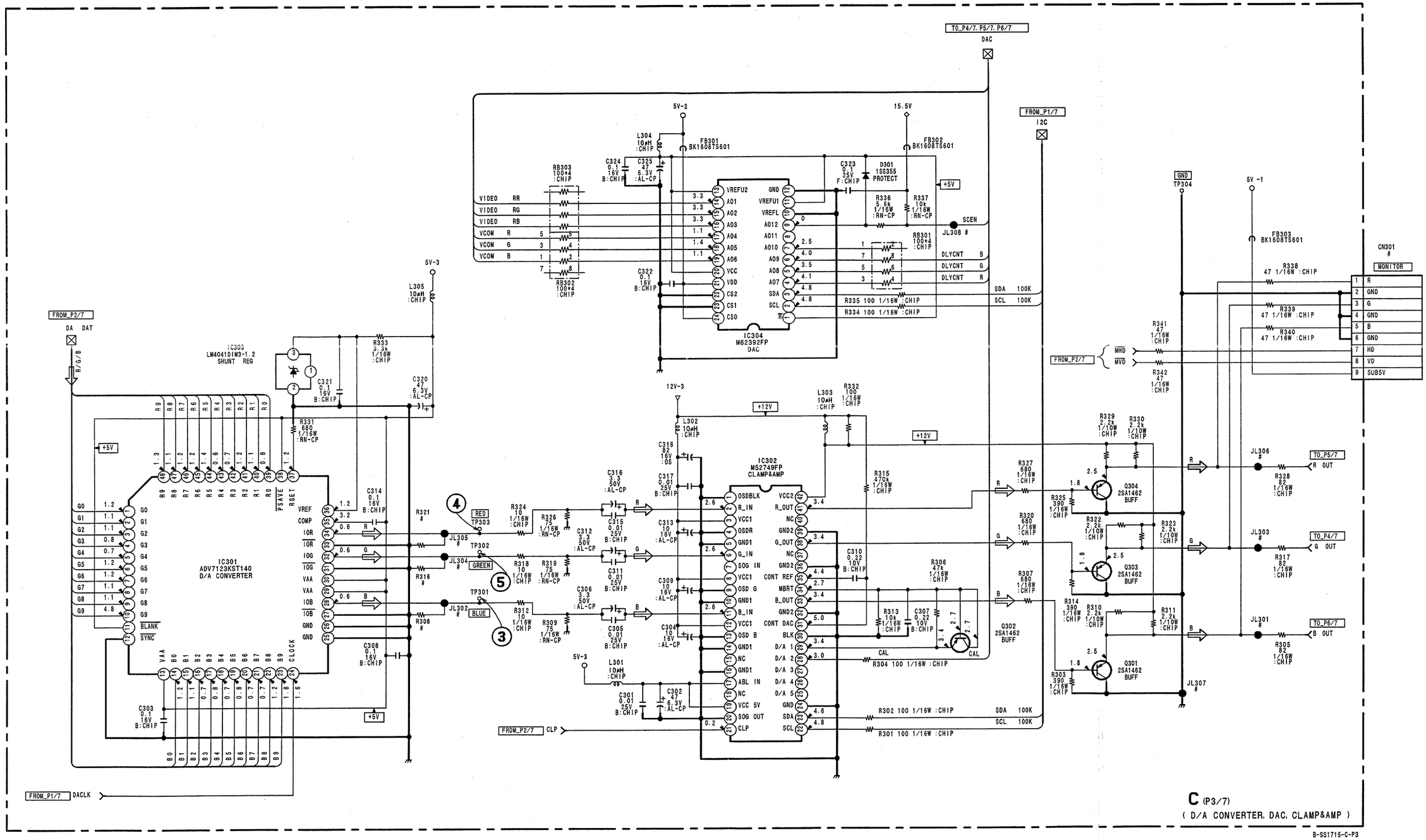
TO_P4/7. P5/7. P6/7
DAC
FROM_P1/7
I2C
GND
TP304
5V -1
5V-2
15.5V
5V-3
12V-3
FROM_P2/7
DA DAT
R/G/B
IC303
LM4041DIM3-1.2
SHUNT REG
IC301
ADV7123KST140
D/A CONVERTER
IC304
M62392FP
DAC
IC302
M52749FP
CLAMP&AMP
FB301
BK1608TS601
FB302
BK1608TS601
FB303
BK1608TS601
D301
1SS355
PROTECT
+5V
+12V
SCEN
JL308 #
DLYCNT B
DLYCNT G
DLYCNT R
SDA 100K
SCL 100K
CN301
MONITOR
R
GND
G
B
HD
VD
SUB5V
MHD
MVD
RED
GREEN
BLUE
TP303
TP302
TP301
JL305 #
JL304 #
JL302 #
JL306 #
JL303 #
JL301 #
JL307 #
TO_P5/7
R OUT
TO_P4/7
G OUT
TO_P6/7
B OUT
Q304
2SA1462
BUFF
Q303
2SA1462
BUFF
Q301
2SA1462
BUFF
Q302
2SA1462
BUFF
CAL
FROM_P2/7 CLP
FROM_P1/7 DACLK
C (P3/7)
(D/A CONVERTER, DAC, CLAMP&AMP)
B-SS1715-C-P3

C (4/7)

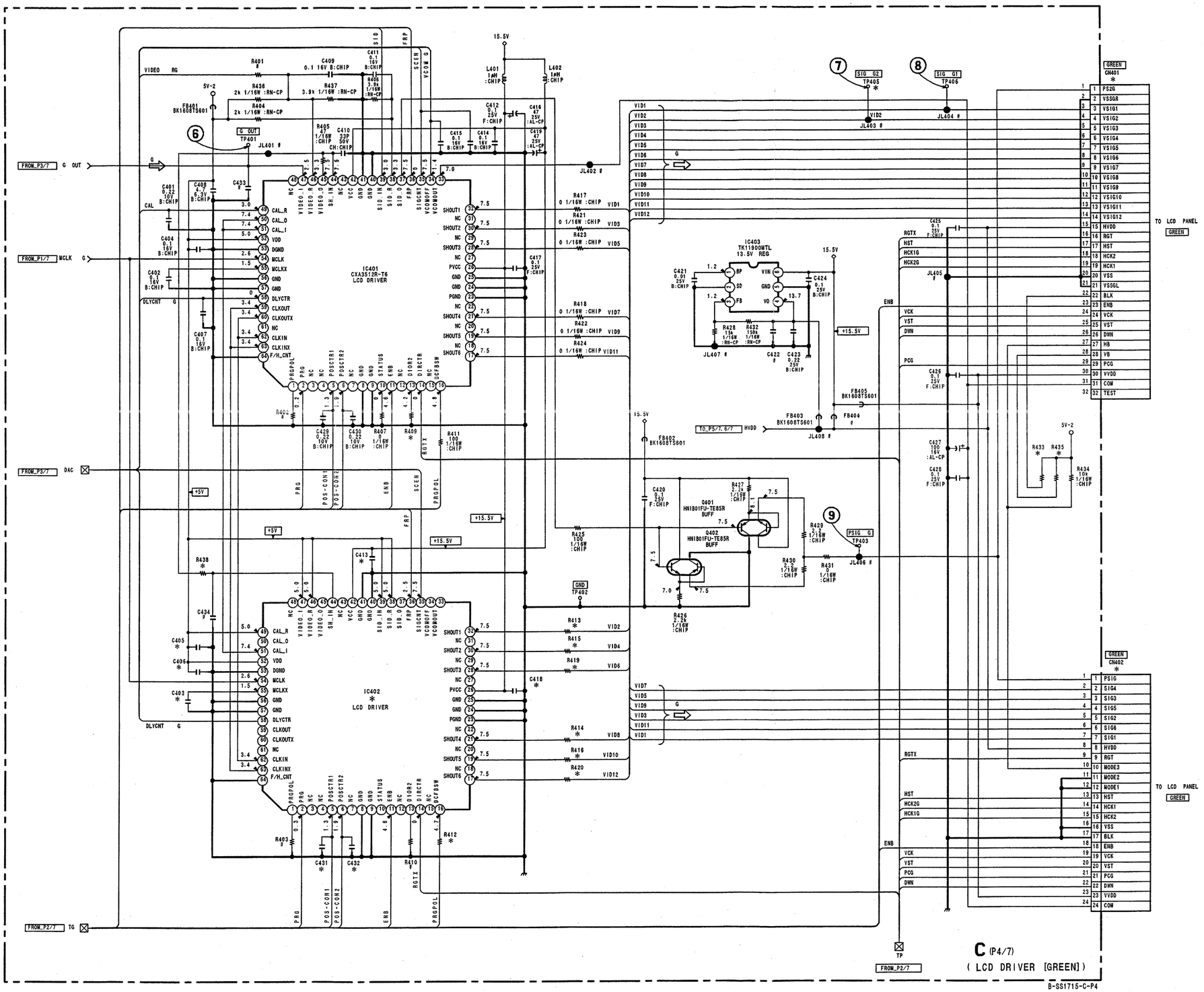

NOTE:*

REF.NO \ MODEL	VPL-CS3	VPL-CX2/CX3
C403	NO MOUNT	0.1 16V B:CHIP
C405	NO MOUNT	4.7 6.3V B:CHIP
C406	NO MOUNT	0.1 16V B:CHIP
C413	NO MOUNT	0.1 25V F:CHIP
C418	NO MOUNT	0.1 25V F:CHIP
C431	NO MOUNT	0.22 10V B:CHIP
C432	NO MOUNT	0.22 10V B:CHIP
CN401	NO MOUNT	32P FPC:SMD
CN402	24P FPC:SMD	NO MOUNT
IC402	NO MOUNT	CXA3512R-T6 LCD DRIVER
R409	0 1/16W:CHIP	NO MOUNT
R412	NO MOUNT	100 1/16W :CHIP
R413	NO MOUNT	0 1/16W :CHIP
R414	NO MOUNT	0 1/16W :CHIP
R415	NO MOUNT	0 1/16W :CHIP
R416	NO MOUNT	0 1/16W :CHIP
R419	NO MOUNT	0 1/16W :CHIP
R420	NO MOUNT	0 1/16W :CHIP
R433	NO MOUNT	10k 1/16W :CHIP
R435	NO MOUNT	10k 1/16W :CHIP
R438	NO MOUNT	0 1/16W :CHIP
TP405	NO MOUNT	CHECKER CHIP

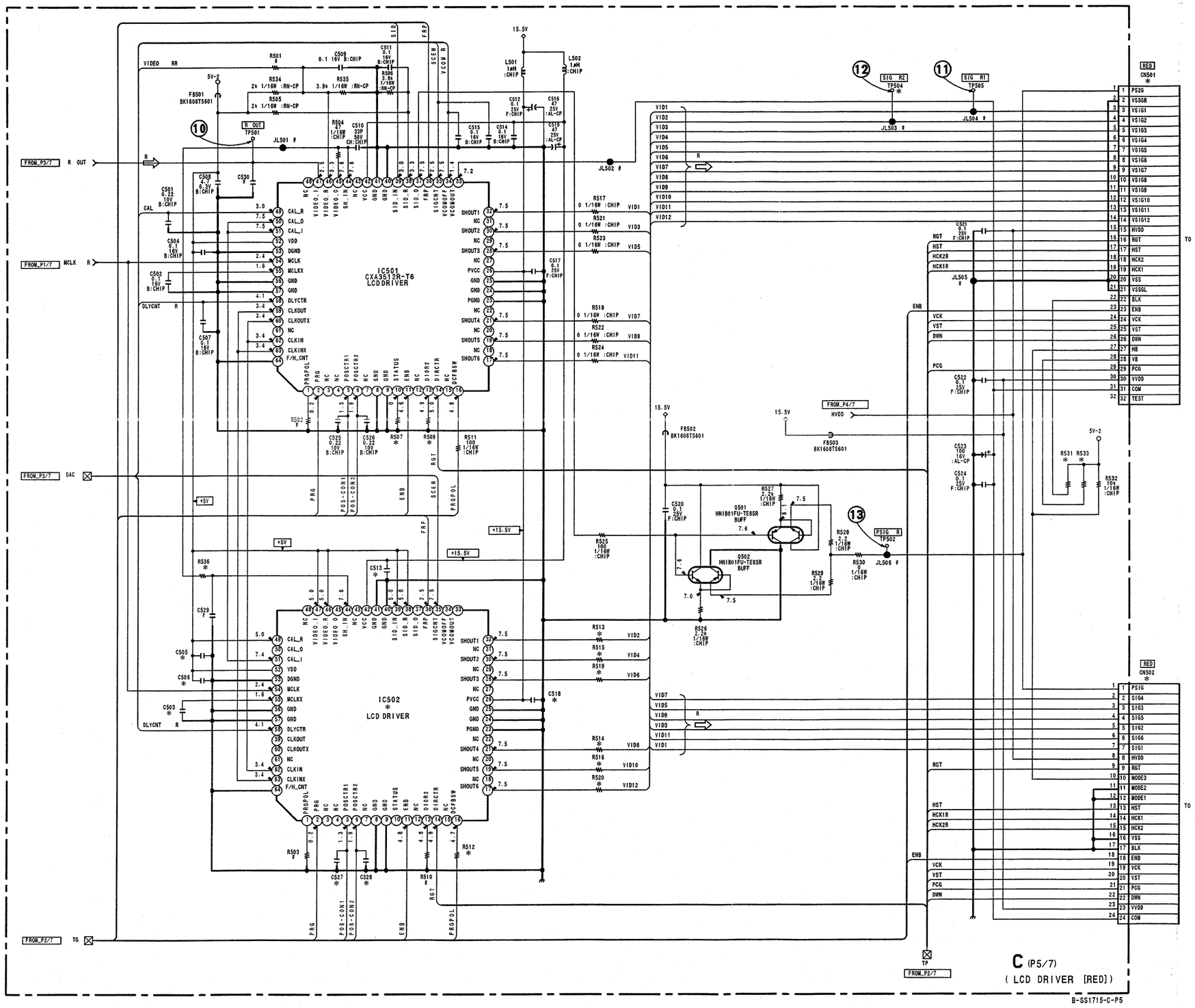

NOTE:*

REF.NO \ MODEL	VPL-CS3	VPL-CX2/CX3
C503	NO MOUNT	0.1 16V B:CHIP
C505	NO MOUNT	4.7 6.3V B:CHIP
C506	NO MOUNT	0.1 16V B:CHIP
C513	NO MOUNT	0.1 25V F:CHIP
C518	NO MOUNT	0.1 25V F:CHIP
C527	NO MOUNT	0.22 10V B:CHIP
C528	NO MOUNT	0.22 10V B:CHIP
CN501	NO MOUNT	32P FPC:SMD
CN502	24P FPC:SMD	NO MOUNT
IC502	NO MOUNT	CXA3512R-T6 LCD DRIVER
R507	NO MOUNT	0 1/16W :CHIP
R509	0 1/16W:CHIP	NO MOUNT
R512	NO MOUNT	100 1/16W :CHIP
R513	NO MOUNT	0 1/16W :CHIP
R514	NO MOUNT	0 1/16W :CHIP
R515	NO MOUNT	0 1/16W :CHIP
R516	NO MOUNT	0 1/16W :CHIP
R519	NO MOUNT	0 1/16W :CHIP
R520	NO MOUNT	0 1/16W :CHIP
R531	NO MOUNT	10k 1/16W :CHIP
R533	NO MOUNT	10k 1/16W :CHIP
R536	NO MOUNT	0 1/16W :CHIP
TP504	NO MOUNT	CHECKER CHIP

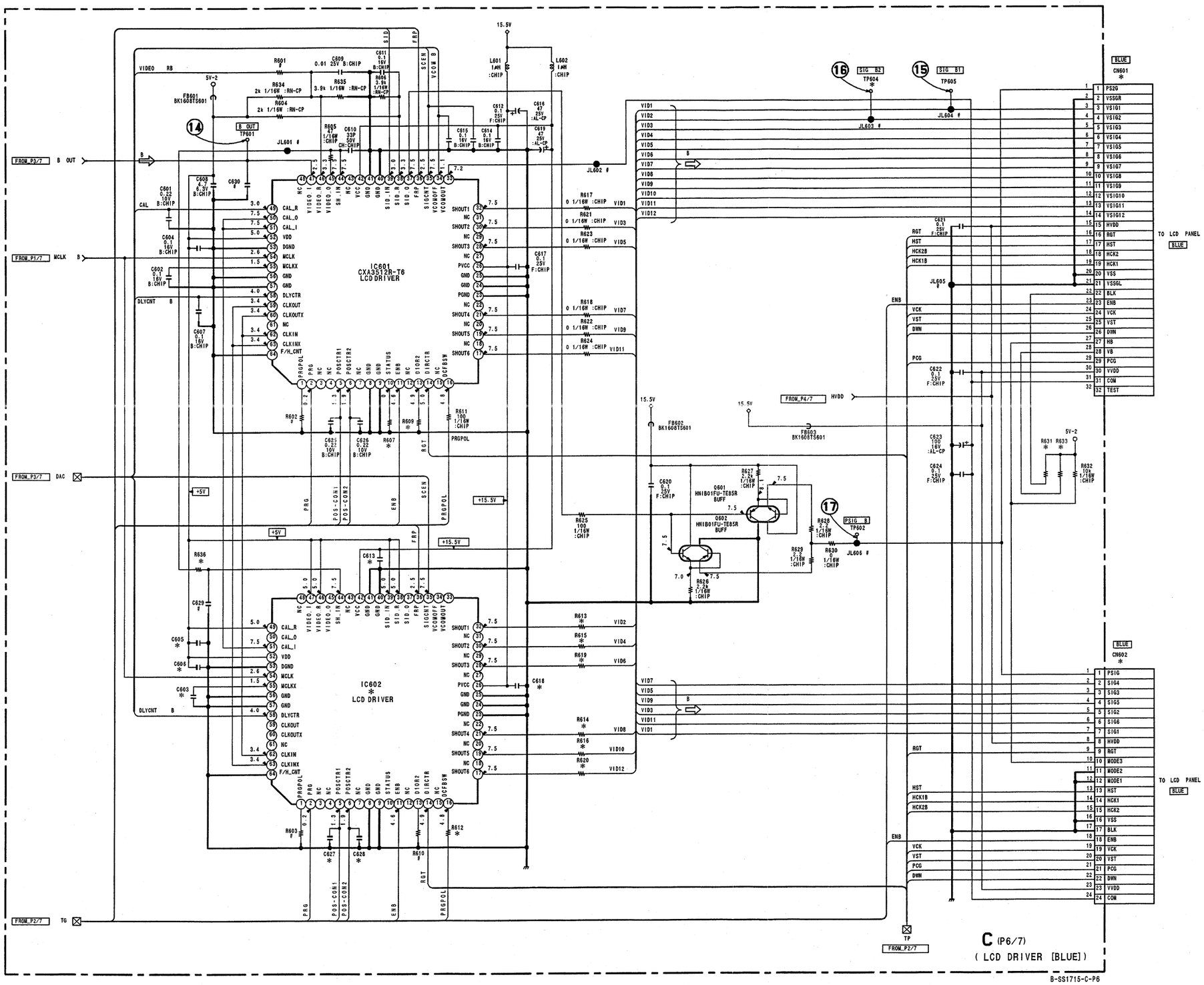

NOTE:*

REF.NO \ MODEL	VPL-CS3	VPL-CX2/CX3
C603	NO MOUNT	0.1 16V B:CHIP
C605	NO MOUNT	4.7 6.3V B:CHIP
C606	NO MOUNT	0.1 16V B:CHIP
C613	NO MOUNT	0.1 25V F:CHIP
C618	NO MOUNT	0.1 25V F:CHIP
C627	NO MOUNT	0.22 10V B:CHIP
C628	NO MOUNT	0.22 10V B:CHIP
CN601	NO MOUNT	32P FPC:SMD
CN602	24P FPC:SMD	NO MOUNT
IC602	NO MOUNT	CXA3512R-T6 LCD DRIVER
R607	NO MOUNT	0 1/16W :CHIP
R609	0 1/16W:CHIP	NO MOUNT
R612	NO MOUNT	100 1/16W :CHIP
R613	NO MOUNT	0 1/16W :CHIP
R614	NO MOUNT	0 1/16W :CHIP
R615	NO MOUNT	0 1/16W :CHIP
R616	NO MOUNT	0 1/16W :CHIP
R619	NO MOUNT	0 1/16W :CHIP
R620	NO MOUNT	0 1/16W :CHIP
R631	NO MOUNT	10k 1/16W :CHIP
R633	NO MOUNT	10k 1/16W :CHIP
R636	NO MOUNT	0 1/16W :CHIP
TP604	NO MOUNT	CHECKER CHIP

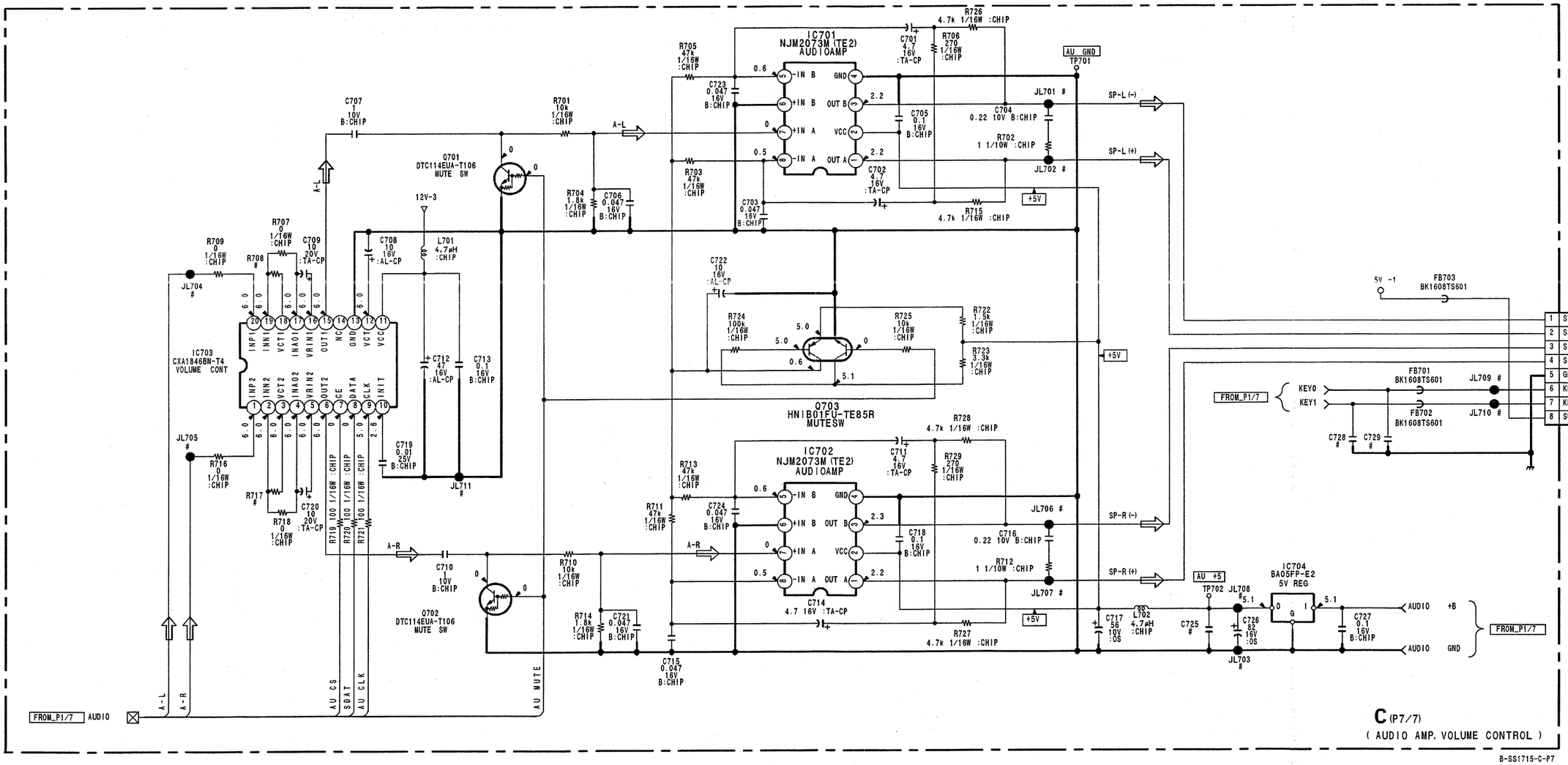

C (P7/7)
(AUDIO AMP, VOLUME CONTROL)

B-SS1715-C-P7

F Board

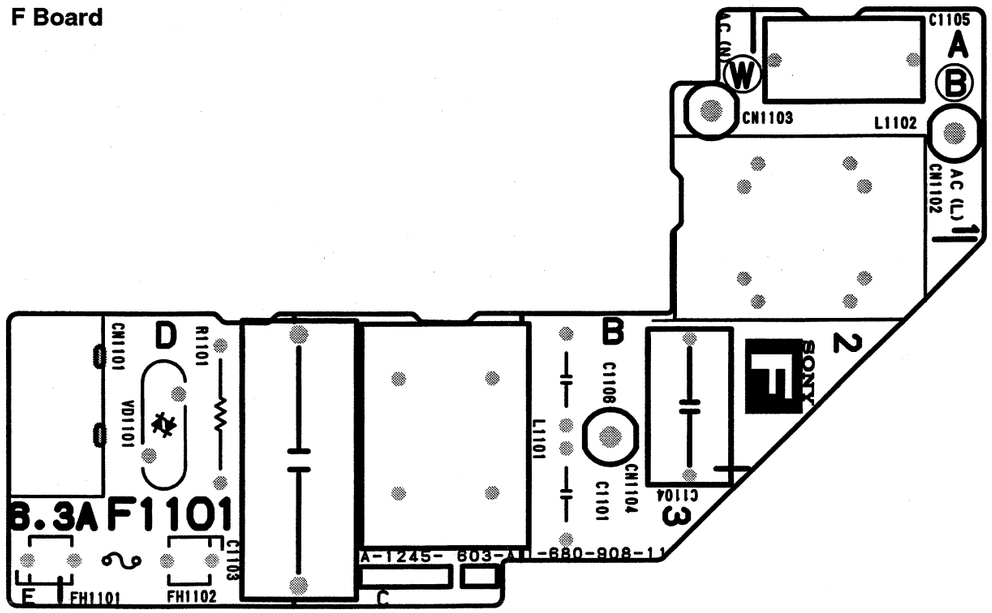

F -A SIDE-
SUFFIX: -11

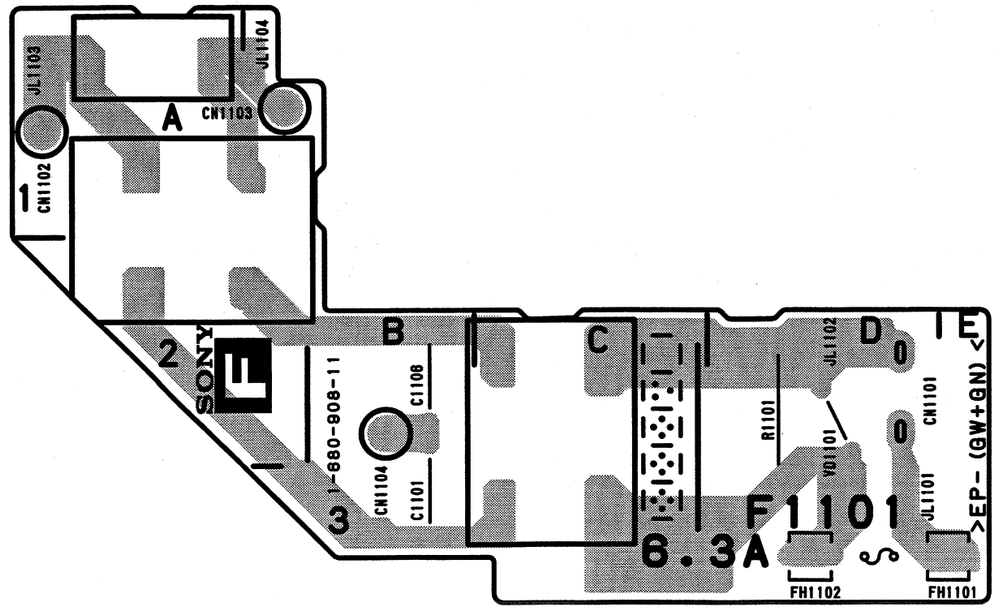

F -B SIDE-
SUFFIX: -11

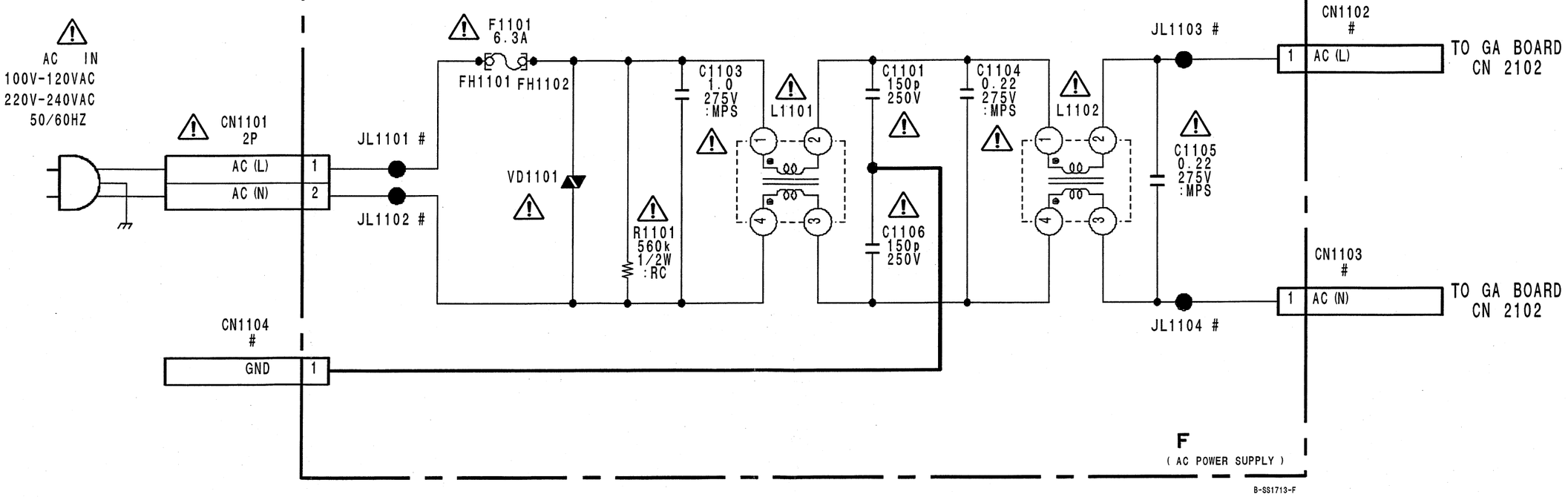

GA Board

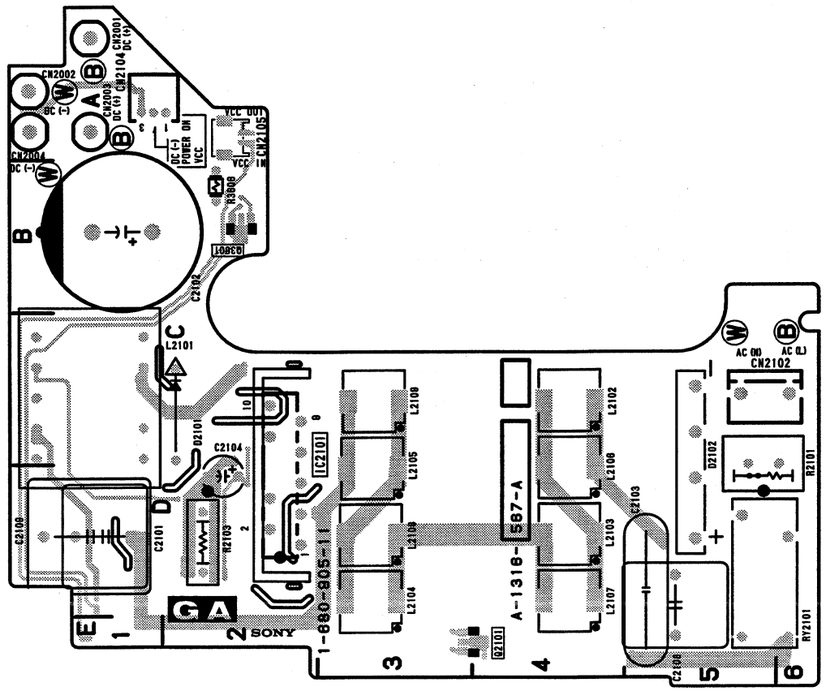

GA -A SIDE-
SUFFIX: -11

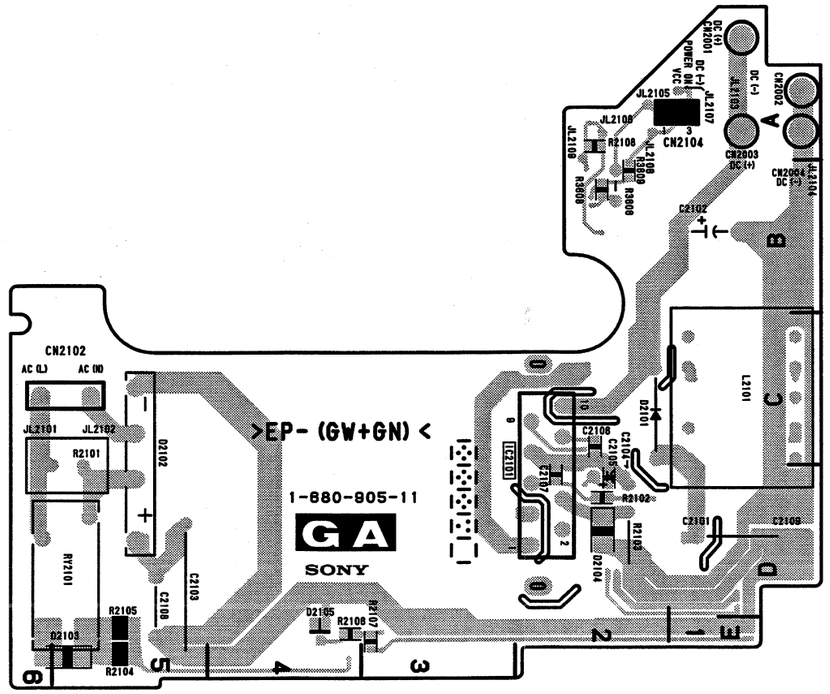

GA -B SIDE-
SUFFIX: -11

GA Board

IC2101	C-3
Q2101	E-4
D2101	C-2
D2102	C-5
D2103	*E-5
D2104	*D-2
D2105	*D-4

*:B Side mount

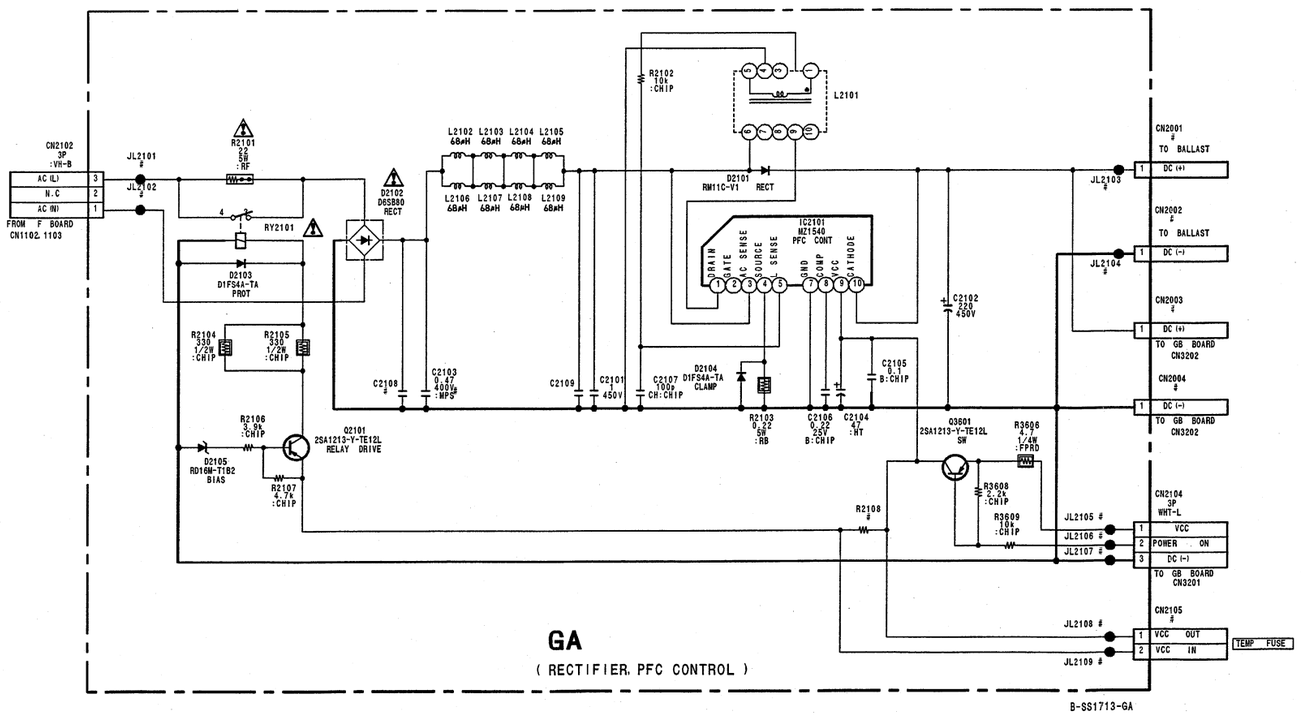

MZ1540 (IC2101)

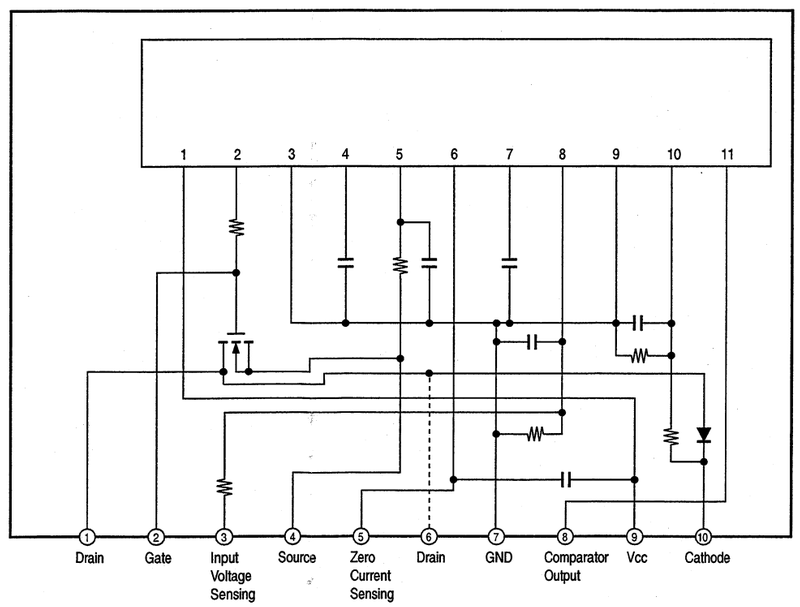

GB Board

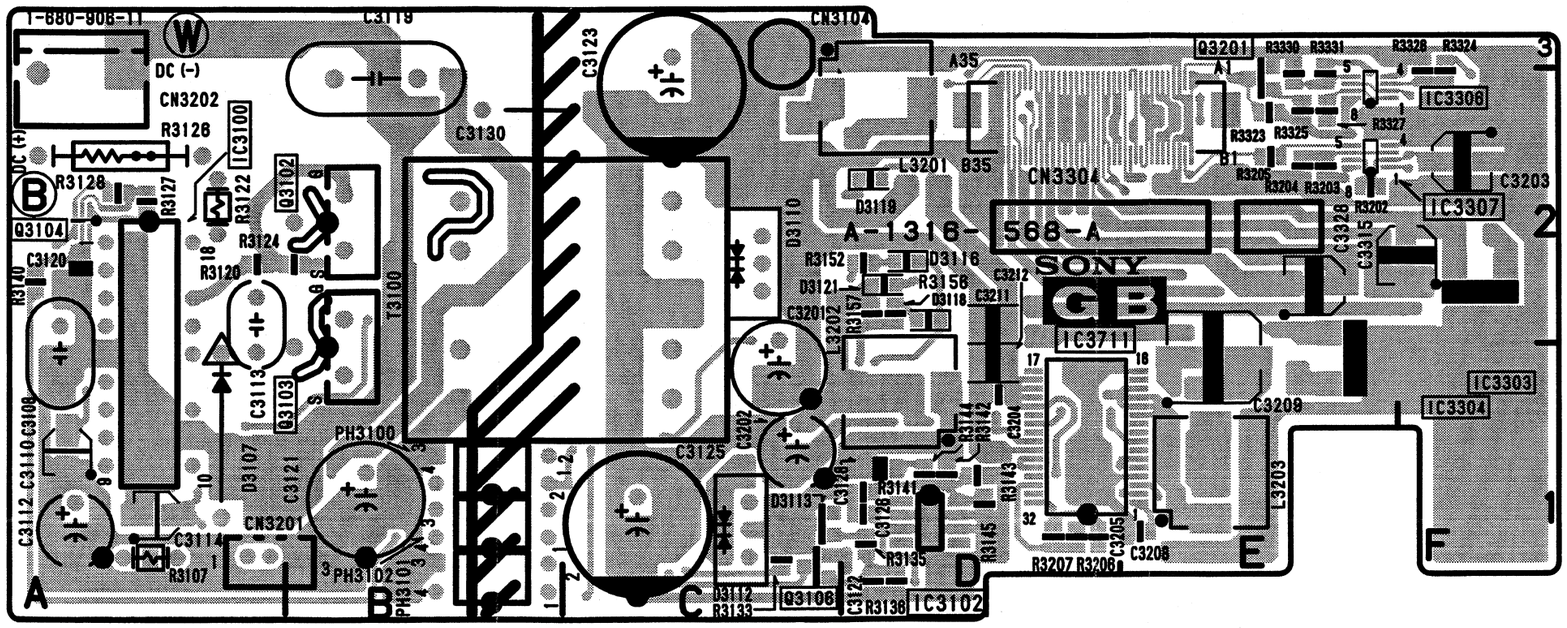

GB -A SIDE-
SUFFIX: -11

TL431BCDR2 (IC3102)

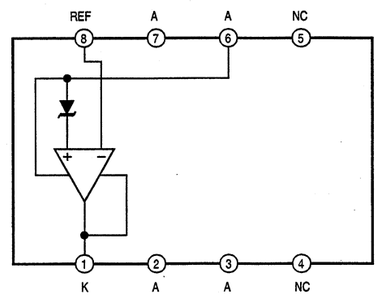

GB Board

IC3100	A-2
IC3102	D-1
IC3303	F-1
IC3304	F-1
IC3306	F-2
IC3307	F-2
IC3711	E-1
Q3102	A-2
Q3103	A-1
Q3104	A-2
Q3106	C-1
Q3107	*D-2
Q3109	*D-2
Q3110	*E-2
Q3201	E-3
D3103	*A-2
D3104	*A-1
D3107	A-1
D3108	*E-1
D3109	*B-2
D3110	C-2
D3112	C-1
D3113	C-1
D3116	D-2
D3118	D-2
D3119	D-2
D3121	C-2
D3201	*D-1
D3306	*F-2

*:B Side mount

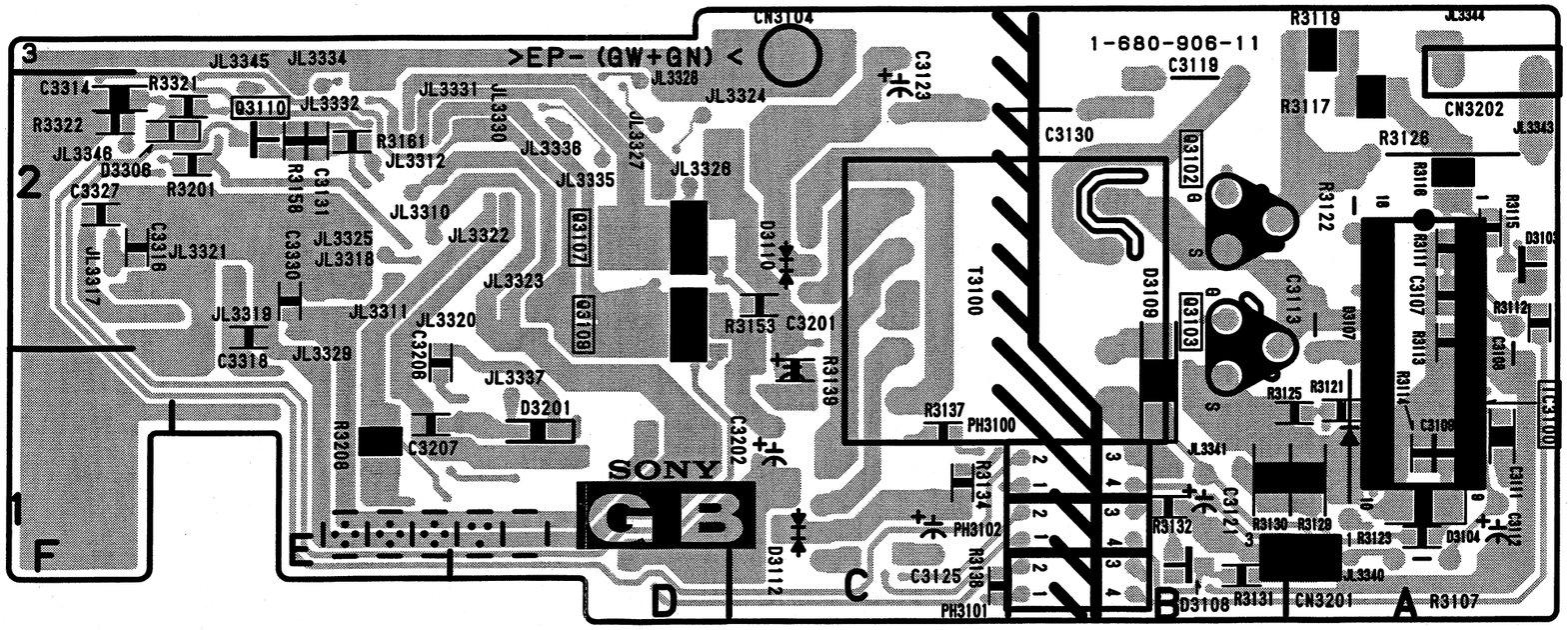

GB -B SIDE-
SUFFIX: -11

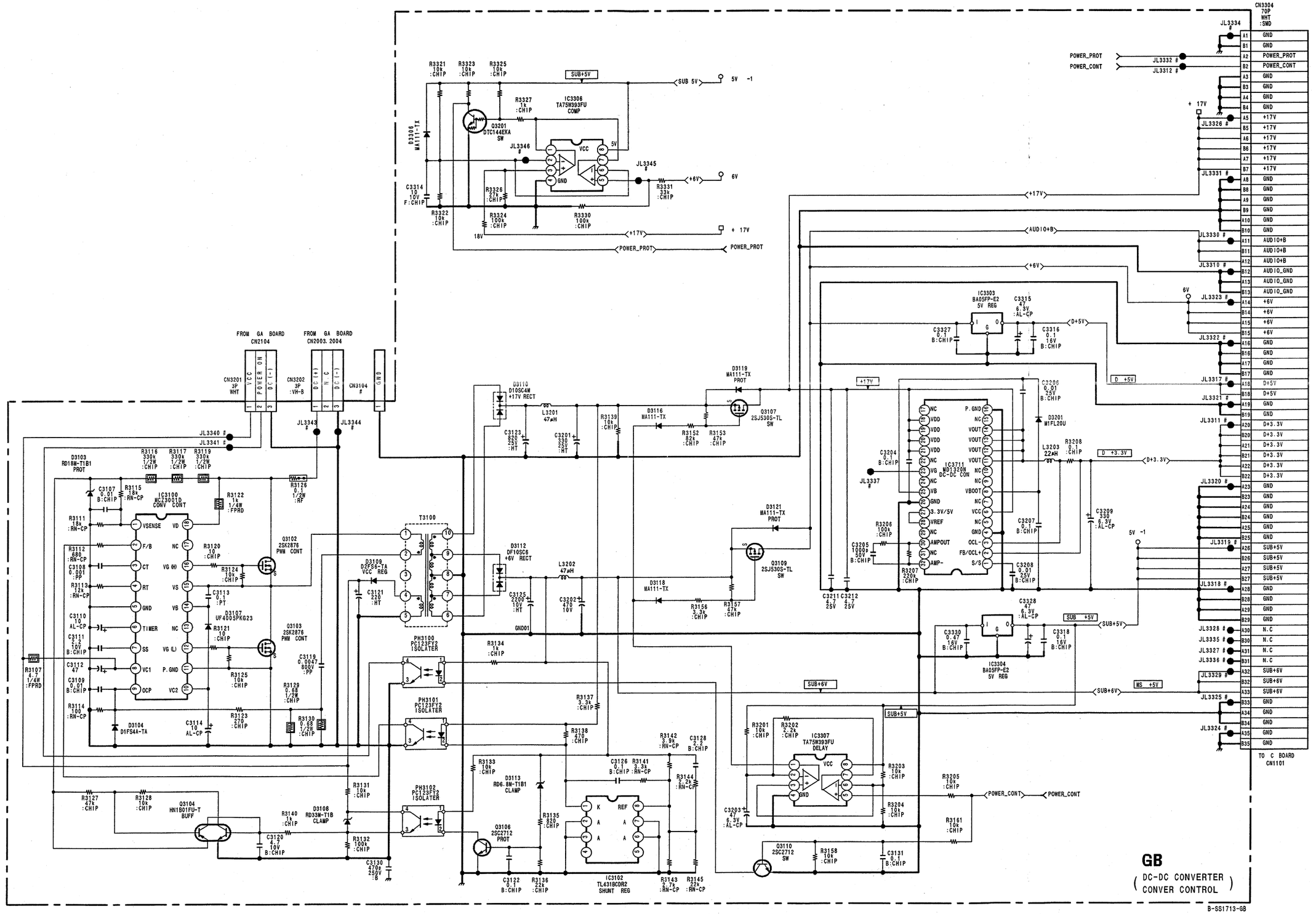

VPL-CS3/CX2/CX3

7-27 7-27

A | B | C | D | E | F | G | H

VIDE-V28268 / DRUCK37

GC Board

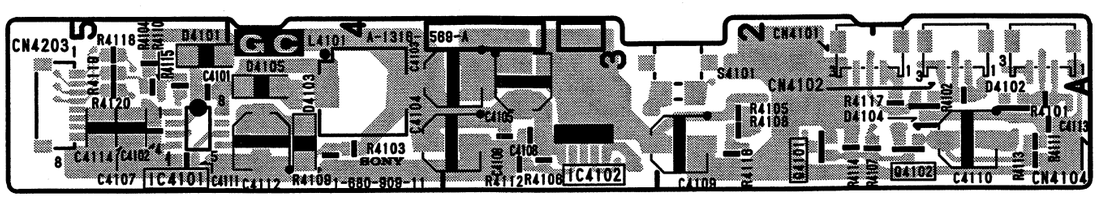

GC -A SIDE-
SUFFIX: -11

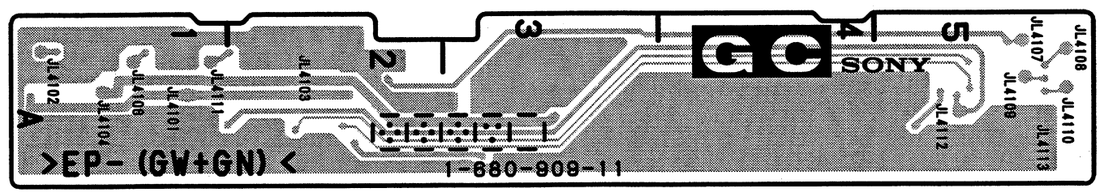

GC -B SIDE-
SUFFIX: -11

GC Board

```
IC4101   A-5
IC4102   A-3

Q4101    A-2
Q4102    A-1

D4101    A-5
D4102    A-1
D4103    A-4
D4104    A-2
D4105    A-4

*:B Side mount
```

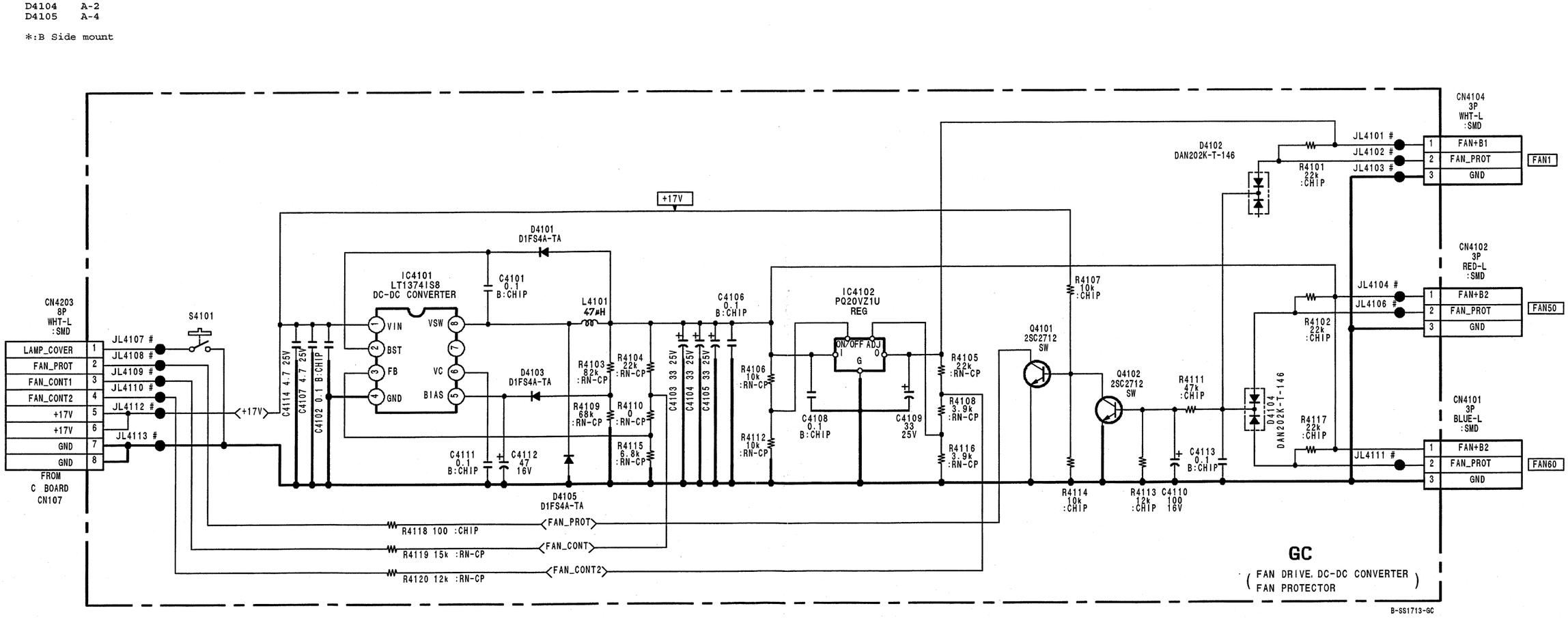

H Board

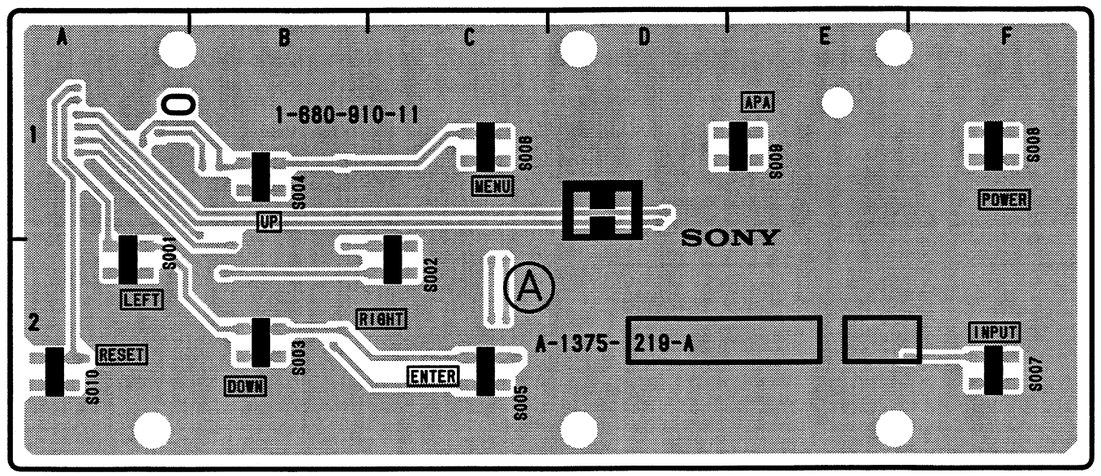

H -A SIDE-
SUFFIX: -11

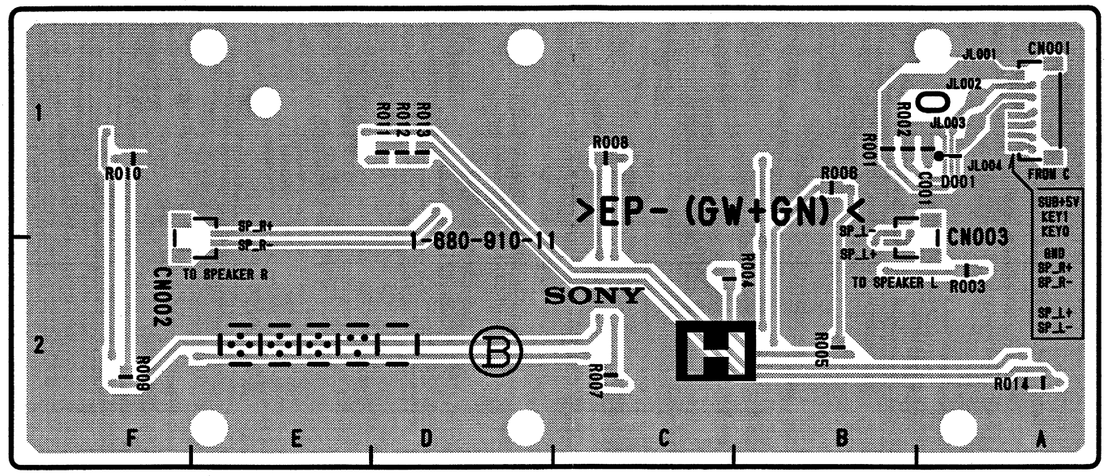

H -B SIDE-
SUFFIX: -11

NF Board

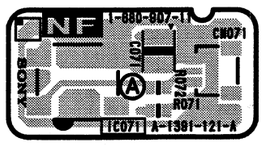

NF -A SIDE-
SUFFIX: -11

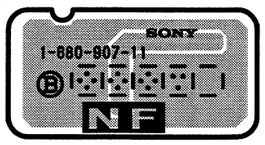

NF -B SIDE-
SUFFIX: -11

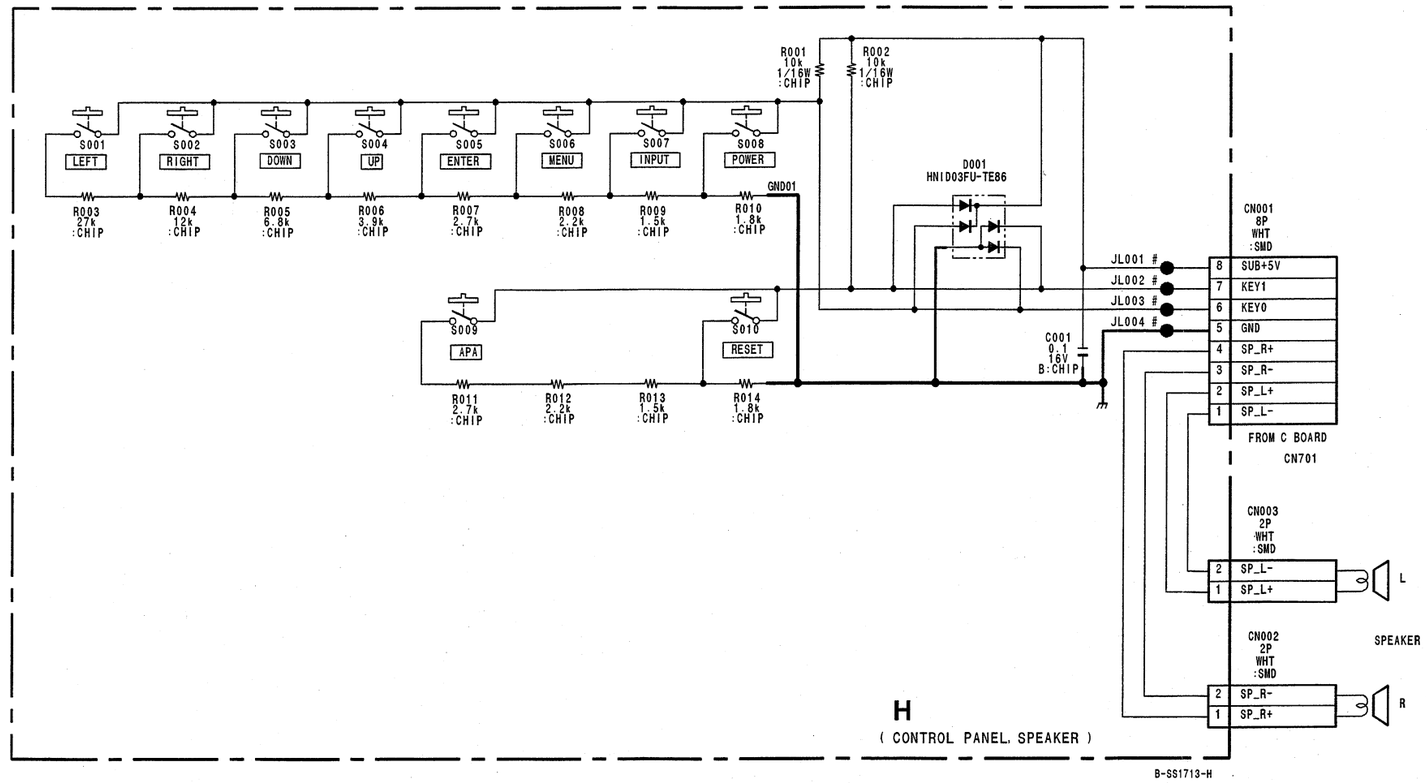

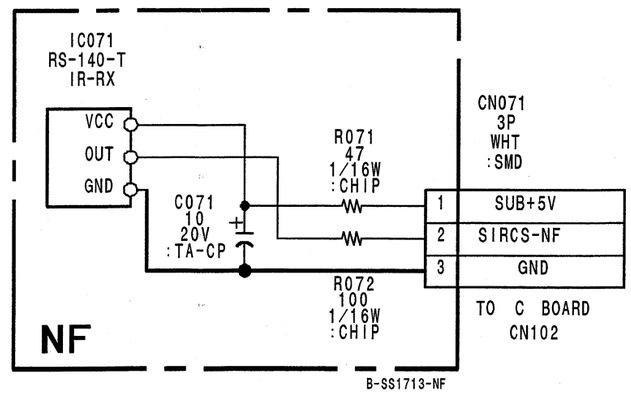

QB Board

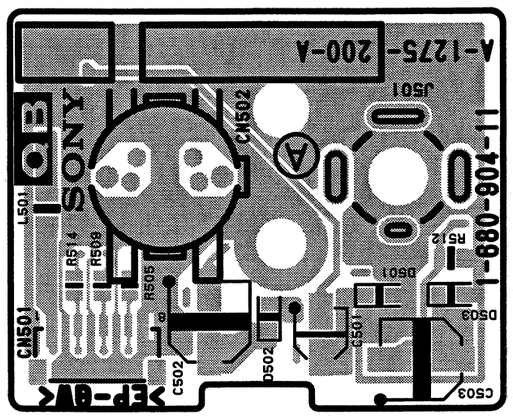

QB -A SIDE-
SUFFIX: -11

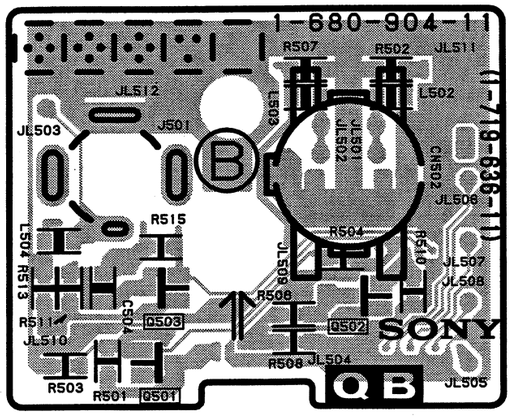

QB -B SIDE-
SUFFIX: -11

V Board

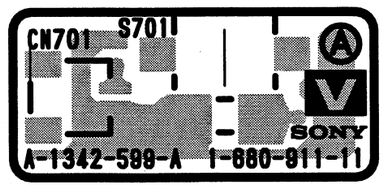

V -A SIDE-
SUFFIX: -11

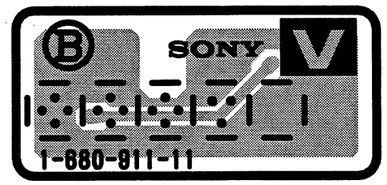

V -B SIDE-
SUFFIX: -11

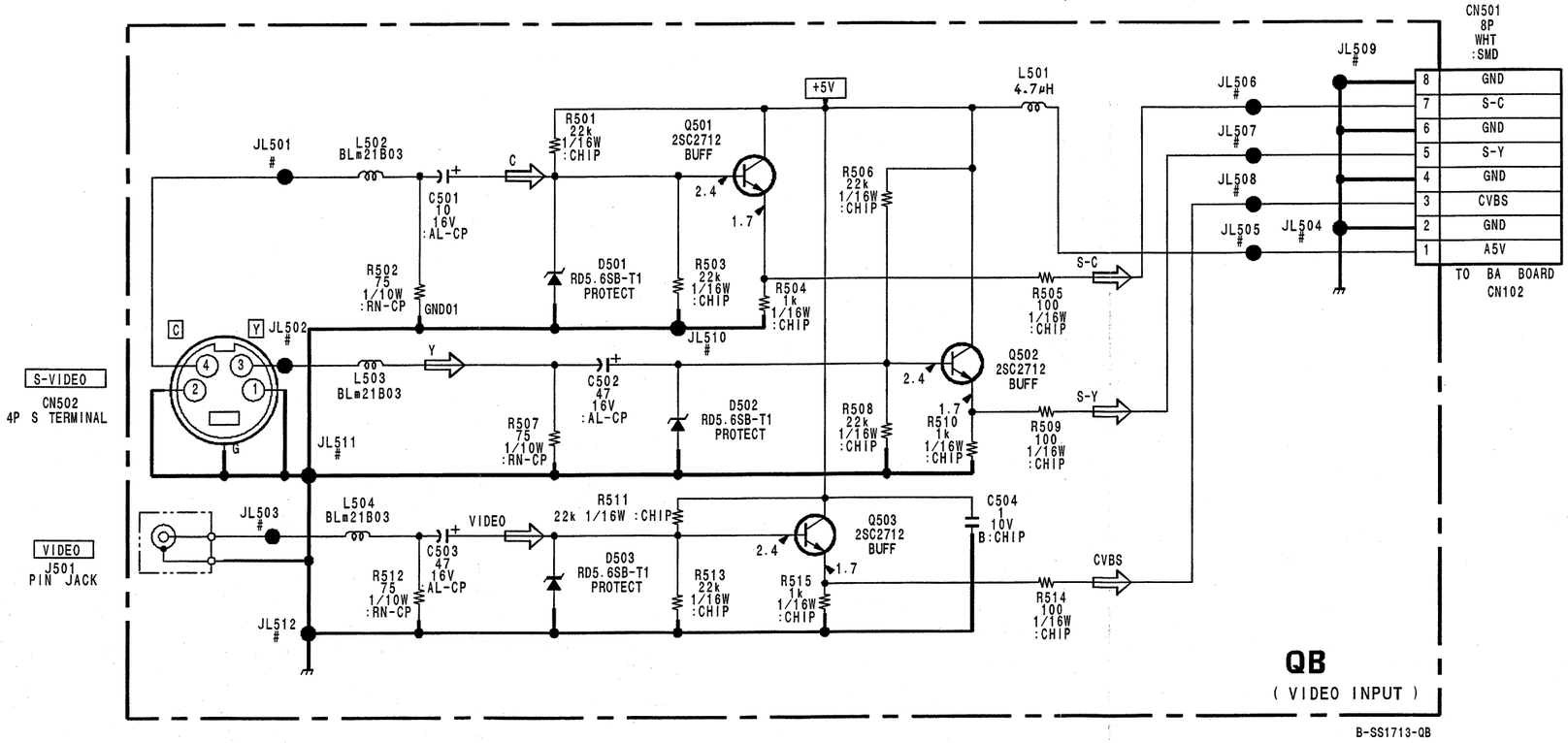

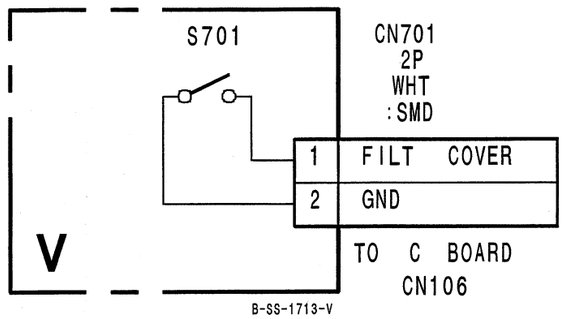

MS Board [VPL-CX3 ONLY]

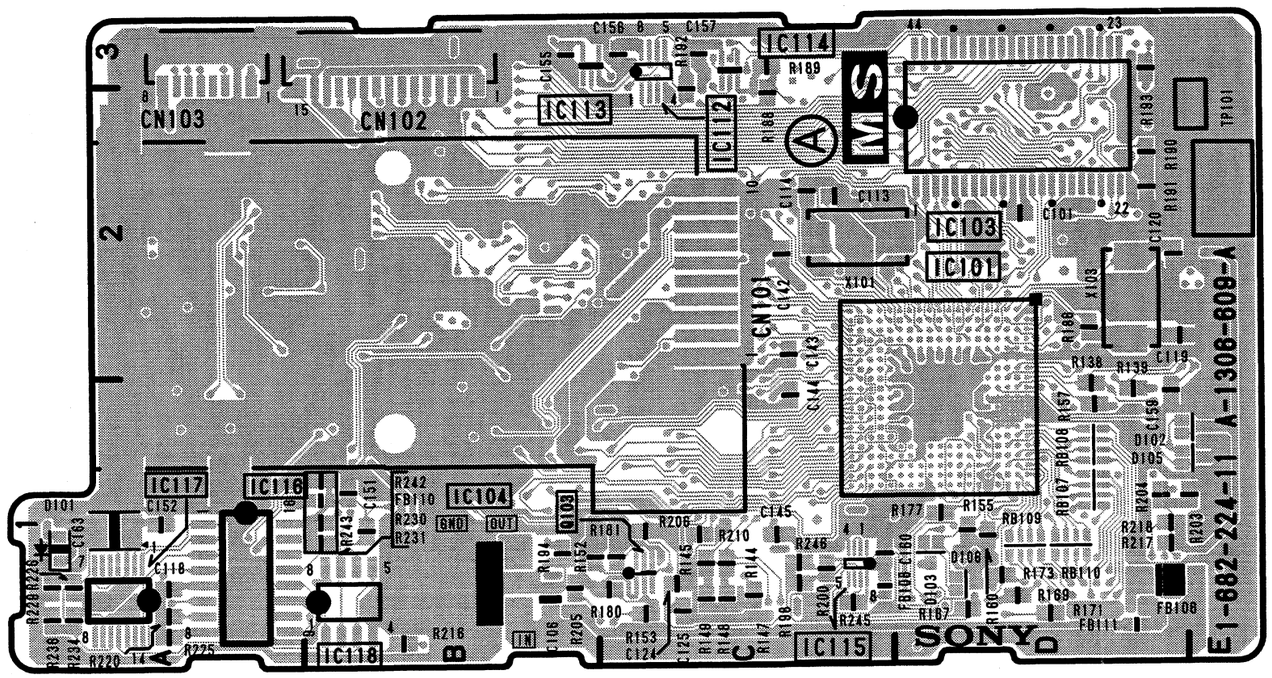

MS -A SIDE-
SUFFIX: -11

MS Board

D101	A-1
D102	D-1
D103	D-1
D104	* D-1
D105	D-1
D106	D-1
D107	* D-1
D108	* B-2
IC101	D-2
IC102	* D-3
IC103	D-2
IC104	B-1
IC105	* B-2
IC106	* C-1
IC107	* C-1
IC108	* C-2
IC110	* A-2
IC111	* C-3
IC112	C-2
IC113	C-2
IC114	C-3
IC115	C-1
IC116	A-1
IC117	A-1
IC118	B-1
Q101	* B-1
Q102	* B-1
Q103	B-1
Q104	* A-1
Q105	* C-1
TP101	E-2

*:B Side mount

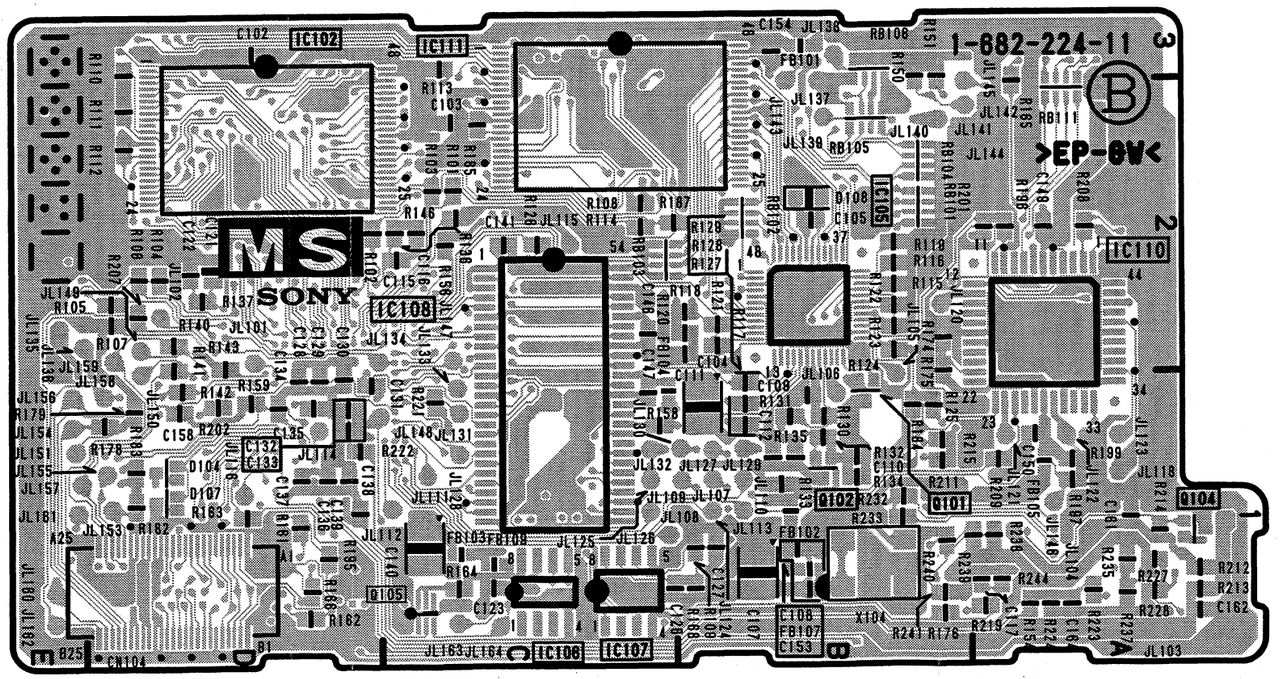

MS -B SIDE-
SUFFIX: -11

[VPL-CX3 ONLY]

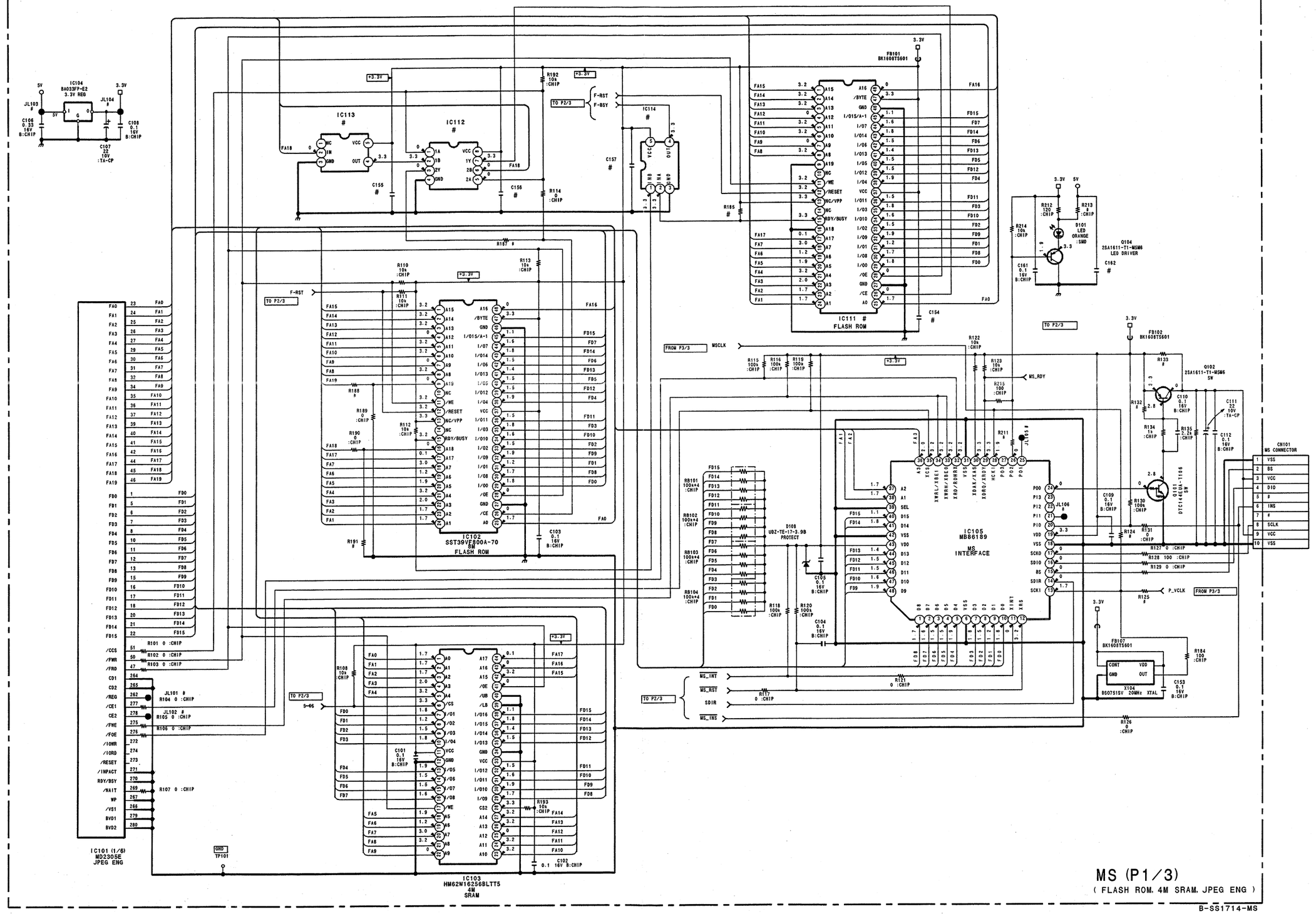
IC104 BA033FP-E2 3.3V REG
IC113 #
IC112 #
IC114 #
IC111 # FLASH ROM
FB101 BK1608TS601
IC102 SST39VF800A-70 8M FLASH ROM
IC103 HM62W16256BLTT5 4M SRAM
IC101 (1/6) MD2305E JPEG ENG
IC105 MB86189 MS INTERFACE
FB102 BK1608TS601
FB107 BK1608TS601
Q104 2SA1611-T1-MSM6 LED DRIVER
Q102 2SA1611-T1-MSM6 SW
D101 LED ORANGE :SMD
D108 UDZ-TE-17-3.9B PROTECT
X104 8S07515V 20MHz XTAL
CN101 MS CONNECTOR
TO P2/3
FROM P3/3
MS_RDY
MS_INT
MS_RST
SDIR
MS_INS
P_VCLK
MSCLK
MS (P1/3)
(FLASH ROM, 4M SRAM, JPEG ENG)
B-SS1714-MS

[VPL-CX3 ONLY]

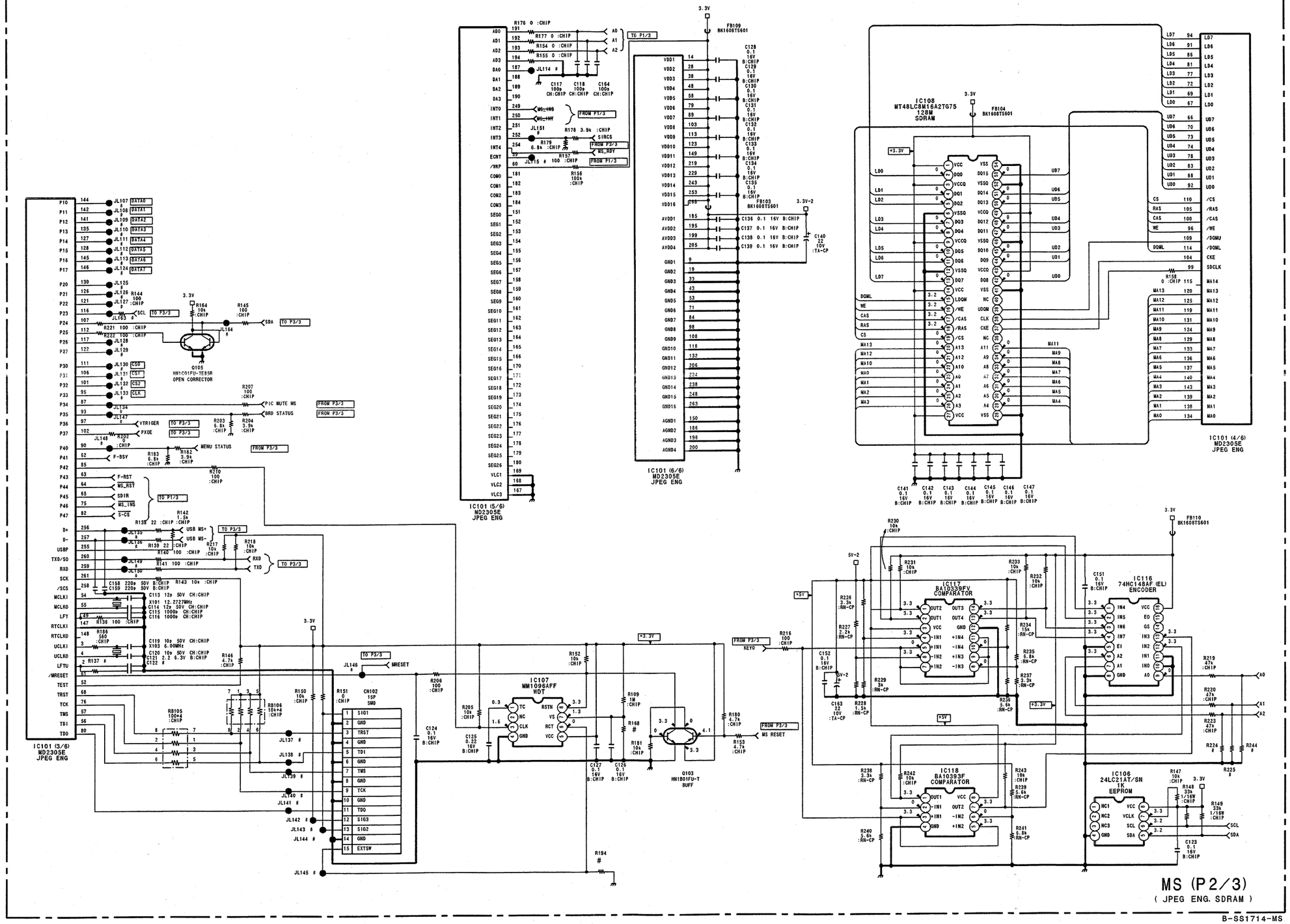
IC101 (3/6) MD2305E JPEG ENG
IC101 (5/6) MD2305E JPEG ENG
IC101 (6/6) MD2305E JPEG ENG
IC101 (4/6) MD2305E JPEG ENG
IC108 MT48LC8M16A2TG75 128M SDRAM
IC107 MM1096AFF WDT
IC117 BA10339FV COMPARATOR
IC118 BA10393F COMPARATOR
IC116 74HC148AF (EL) ENCODER
IC106 24LC21AT/SN 1K EEPROM
Q105 HN1C01FU-TE85R OPEN CORRECTOR
Q103 HN1B01FU-T BUFF
CN102 15P SMD
MS (P2/3)
(JPEG ENG. SDRAM)
B-SS1714-MS

[VPL-CX3 ONLY]

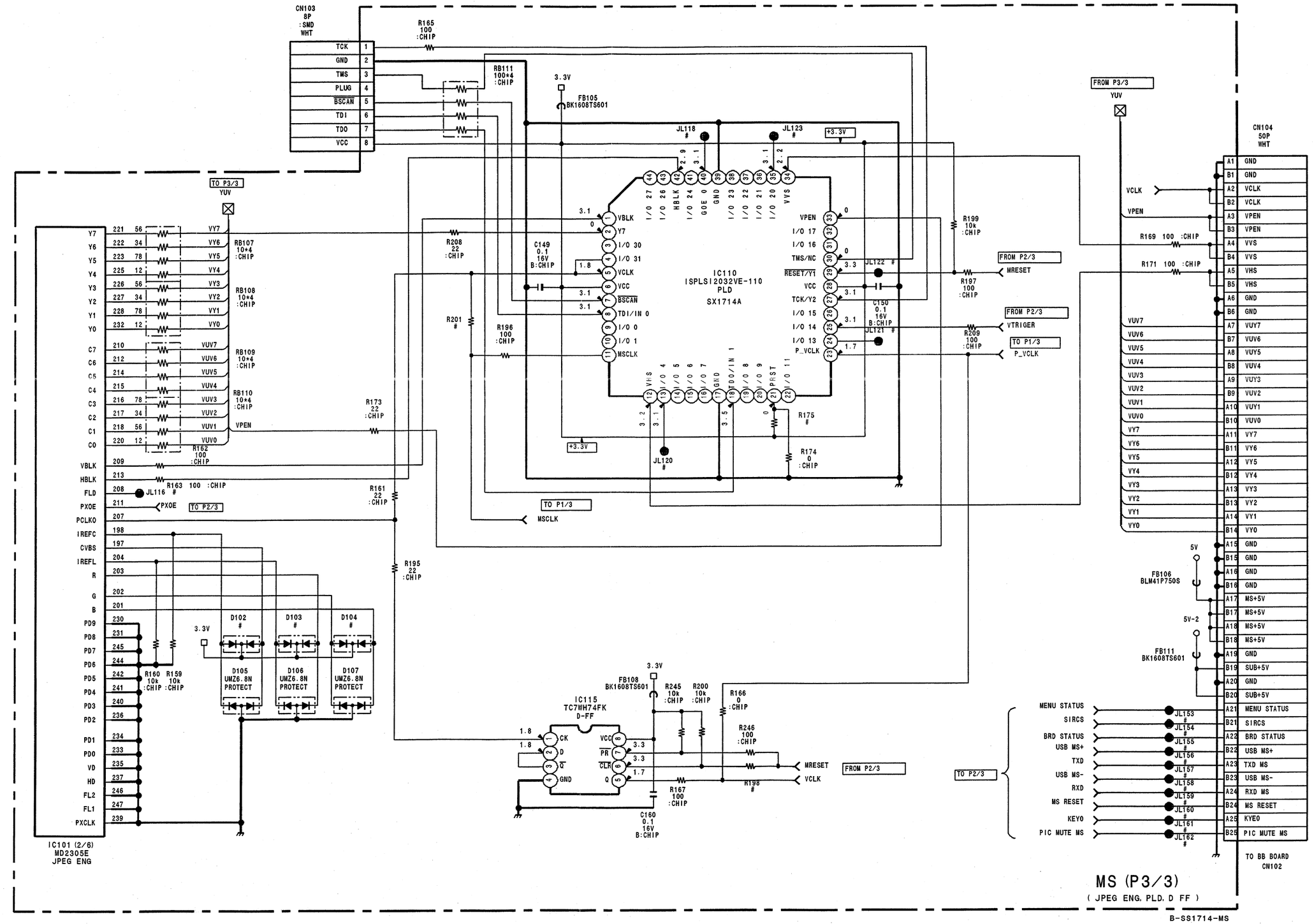

MS (P3/3)

(JPEG ENG. PLD. D FF)

B-SS1714-MS

QA Board [VPL-CX3 ONLY]

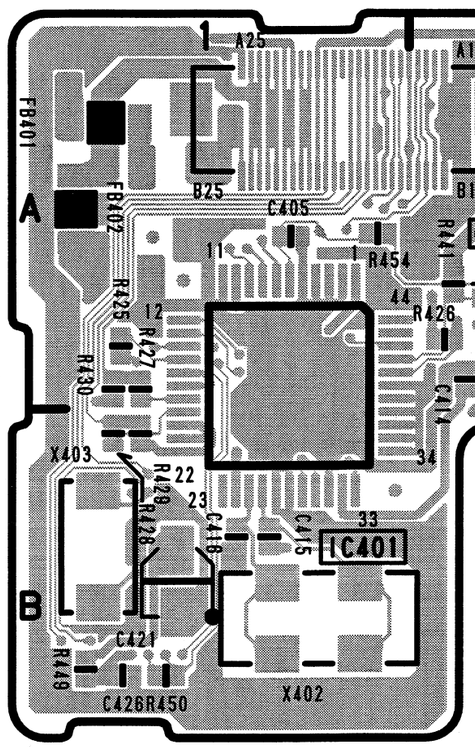

QA -A SIDE-
SUFFIX: -11

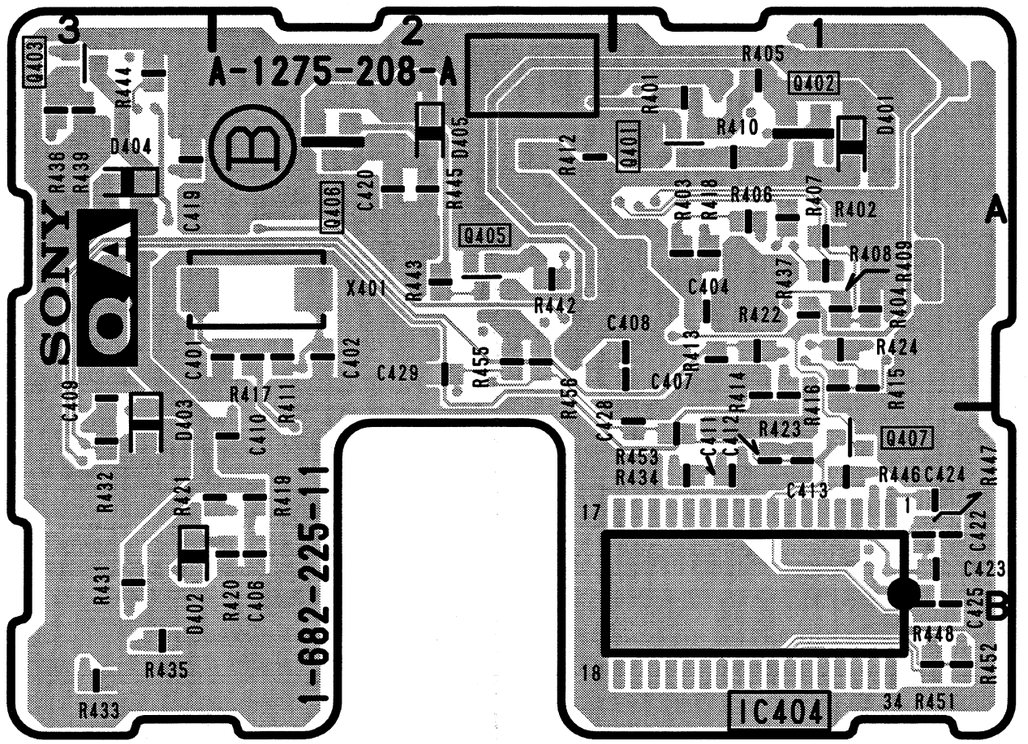

QA -B SIDE-
SUFFIX: -11

QA Board

```
D401   * A-1
D402   * B-3
D403   * B-3
D404   * A-3
D405   * A-2
D406     B-2

IC401    A-1
IC402    A-3
IC403    B-2
IC404  * B-1
IC405    B-2


Q401   * A-1
Q402   * A-1
Q403   * A-3
Q404     B-2
Q405   * A-2
Q406   * A-2
Q407   * B-1

*:B Side mount
```

[VPL-CX3 ONLY]

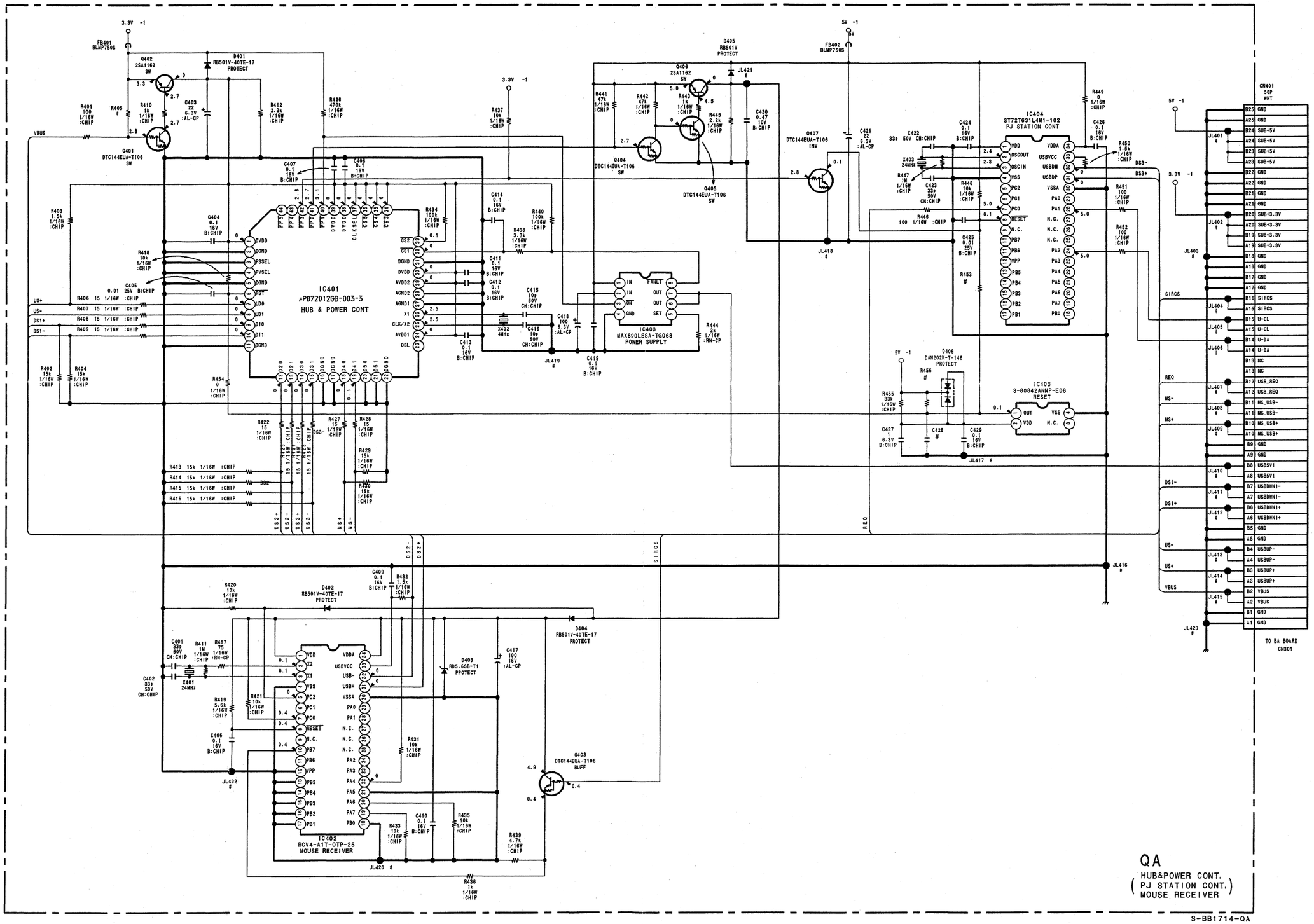
IC401
μPD72012GB-003-3
HUB & POWER CONT
IC402
RCV4-A1T-OTP-25
MOUSE RECEIVER
IC403
MAX890LESA-TG068
POWER SUPPLY
IC404
ST72T631L4M1-102
PJ STATION CONT
IC405
S-80842ANNP-ED6
RESET
Q401 DTC144EUA-T106 SW
Q402 2SA1162 SW
Q403 DTC144EUA-T106 BUFF
Q404 DTC144EUA-T106 SW
Q405 DTC144EUA-T106 SW
Q406 2SA1162 SW
Q407 DTC144EUA-T106 INV
D401 RB501V-40TE-17 PROTECT
D402 RB501V-40TE-17 PROTECT
D403 RD5.6SB-T1 PPOTECT
D404 RB501V-40TE-17 PROTECT
D405 RB501V PROTECT
D406 DAN202K-T-146 PROTECT
FB401 BLM7750S
FB402 BLM7750S
X401 24MHz
X402 4MHz
X403 24MHz
CN401 50P WHT
TO BA BOARD CN301
VBUS
US+
US-
DS1+
DS1-
DS2+
DS2-
DS3+
DS3-
MS+
MS-
SIRCS
REQ
QA
HUB&POWER CONT.
PJ STATION CONT.
MOUSE RECEIVER
S-BB1714-QA

SAFETY CHECK-OUT

After correcting the original service problem, perform the following safety checks before releasing the set to the customer :

Check the metal trim, "metallized" knobs, screws, and all other exposed metal parts for AC leakage. Check leakage as described below.

LEAKAGE TEST

The AC leakage from any exposed metal part to earth ground and from all exposed metal parts to any exposed metal part having a return to chassis, must not exceed 0.5 mA. Leakage current can be measured by any one of three methods.

1. A commercial leakage tester, such as the Simpson 229 or RCA WT-540A. Follow the manufacturers' instructions to use these instruments.
2. A battery-operated AC milliammeter. The Data Precision 245 digital multimeter is suitable for this job.
3. Measuring the voltage drop across a resistor by means of a VOM or battery-operated AC voltmeter. The "limit" indication is 0.75 V, so analog meters must have an accurate low-voltage scale. The Simpson 250 and Sanwa SH-63Trd are examples of a passive VOM that is suitable. Nearly all battery operated digital multimeters that have a 2 V AC range are suitable. (See Fig. A)

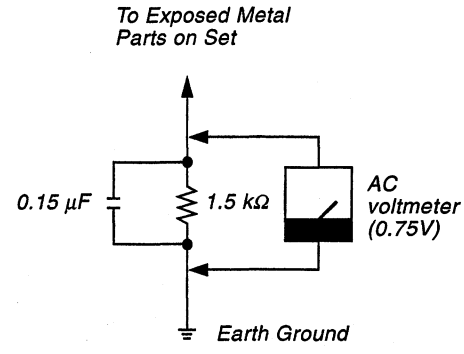

Fig A. Using an AC voltmeter to check AC leakage.